CONSTRUCTION FIRE TESTS

Table of Contents

Page

1.0 SCOPE....3
1.1 Changes....3
2.0 LOSS PREVENTION RECOMMENDATIONS....3
2.1 Construction and Location....3
2.2 Small Scale Tests....3
2.3 Intermediate Scale Tests....5
2.4 Large Scale Tests....7
3.0 SUPPORT FOR RECOMMENDATIONS....9
3.1 General....9
3.1.1 Fire Retardants....9
3.2 Test Data....9
3.3 Small Scale Tests....9
3.3.1 UL94 (Tests for Flammability of Plastic Materials)....9
3.3.2 Horizontal Burning 94HB....10
3.3.3 Vertical Burning (94-5V)....10
3.3.4 Horizontal Burning 94HBF, 94HF-1, 94HF-2....11
3.3.5 Direct Flame Impingement Test: ISO 11925-2, DIN 4102-1....11
3.3.6 Total Heat of Combustion Test, ISO 1716....12
3.3.7 Ash Content Analysis Test, ASTM D482....13
3.3.8 Single Burning Item Test....13
3.3.9 750°C Furnace Tests for Non-combustibility: ASTM E136/ISO 1182....14
3.3.10 FM Fire Propagation Apparatus (FPA) Test....15
3.3.11 Convective Flame Spread Parameters....18
3.3.12 Other International Fire Tests....18
3.4 Intermediate Scale Tests....18
3.4.1 Roof-Top Photovoltaics....18
3.4.2 FM Duct Test....20
3.4.3 Skylight Testing....22
3.4.3.1 European Test for Plastic Skylights....22
3.4.4 FM Roof Calorimeter....23
3.4.5 ASTM E108....24
3.4.6 FM Room Corner Test....24
3.4.7 8 ft. Parallel Panel Test (PPT)....25
3.5 Large Scale Tests....26
3.5.1 FM Corner Fire Tests (ANSI/FM 4880)....27
3.5.2 FM 16 ft Parallel Panel Tests (16 ft PPT)....33
3.5.3 FM 4411....35
3.5.4 Large Diameter Duct Test....35
3.5.5 BS 8414....35
3.5.6 NFPA 285....37
3.5.7 Comparison of Key Façade Fire Tests....39
3.5.8 ASTM E84, Standard Test Method for Surface Burning Characteristics of Building Materials....41
4.0 REFERENCES....42
4.1 FM....42
APPENDIX A GLOSSARY OF TERMS....42
APPENDIX B DOCUMENT REVISION HISTORY....43

List of Figures

©2019-2026 Factory Mutual Insurance Company. All rights reserved.No part of this document may be reproduced, stored in a retrieval system, or transmitted, in whole or in part, in any form or by any means, electronic, mechanical, photocopying, recording, or otherwise, without written permission of Factory Mutual Insurance Company.

Fig. 3.3.5 Direct flame impingement test (©ISO. This material is reproduced from ISO 11925-2 2010, with permission of the American Standards Institute (ANSI) on behalf of the International Organization for Standardization. All rights reserved)....12
Fig 3.3.6 ISO 1716 (Courtesy of Fire Testing Technology)....13
Fig. 3.3.8 Single burning item test apparatus....14
Fig. 3.3.9 Vertical tube furnace Reproduced, with permission from ASTM E136 Standard Test Method for Behavior of Materials in a Vertical Tube Furnace at 750°C, copyright ASTM International, 100 Barr Harbor Drive, West Conshohocken, PA 19428)....15
Fig. 3.3.10-1 Fire propagation apparatus....16
Fig. 3.3.10-2 FPA testing apparatus....17
Fig. 3.3.10-3 FPA testing apparatus....18
Fig. 3.4.1 Redirection of roof flames by PV panel....19
Fig. 3.4.2-1 FM apparatus for the evaluation of industrial exhaust systems....21
Fig. 3.4.2-2 Vertical duct test....22
Fig. 3.4.4 Roof Calorimeter....23
Fig. 3.4.5 ASTM E108 Apparatus....24
Fig. 3.4.6 FM room corner test....25
Fig. 3.4.7 8 ft PPT Layout....26
Fig. 3.5.1-1 ANSI/FM 4880 corner fire test - 25-ft test....27
Fig. 3.5.1-2 ANSI/FM 4880 corner fire test - 50-ft test....28
Fig. 3.5.1-3 FM 25 ft (7.6 m) corner fire test....29
Fig. 3.5.1-4 FM corner test of reinforced plastic (flame spread = 25)....30
Fig. 3.5.1-5 FM corner test (This polyurethane was rated ‘‘self extinguishing’’ by a small-scale test)....31
Fig. 3.5.1-6 FM 50 ft (15.2 m) corner test....32
Fig. 3.5.2 Schematic and picture of a 16 ft (4.9 m) PPT....33
Fig. 3.5.5 Schematic of wall specimen and dimensions in BS-8414-1 (not to scale)....36
Fig. 3.5.6 Schematic of setup and dimensions in NFPA 285 (not to scale)....38
Fig. 3.5.7-1 Fire test examples....40
Fig. 3.5.7-2. Comparison of peak heat flux from ignition source in various exterior-wall large-scale fire tests....41

List of Tables

Table 2.2.1 Small-Scale Tests....4
Table 2.3.1 Intermediate Scale Tests....6
Table 2.4.1 Large Scale Tests....8
Table 3.3.1 Fire Test Limitations and Advantages (UL 94)....10
Table 3.3.5 Fire Test Limitations and Advantages (ISO 11925-2)....12
Table 3.3.6 Fire Testing Limitations and Advantages (ISO 1716)....12
Table 3.3.7 Fire Testing Limitations and Advantages (ASTM D482)....13
Table 3.3.8 Fire Testing Limitations and Advantages (EN 13823)....14
Table 3.3.9 Fire Testing Limitations and Advantages (ASTM E136/ISO 1182)....15
Table 3.3.10 Fire Testing Limitations and Advantages (FPA)....17
Table 3.4.2 Fire Testing Limitations and Advantages (FM 4921-4923)....22
Table 3.4.4 Roof Assembly Class 1 Criteria....23
Table 3.4.5 Exterior Roof Classifications....24
Table 3.5.1-1 Fire Testing Limitations and Advantages (FM Corner Test)....27
Table 3.5.1-2 ANSI/FM 4880 Performance Criteria for Wall Assemblies Based on Corner Fire Tests....28
Table 3.5.2-1 ANSI/FM 4880 Approval Criteria for Wall Assemblies Based....34
Table 3.5.2-2 Fire Testing Limitations and Advantages (FM 4880/4411)....34
Table 3.5.5 Fire Testing Limitations and Advantages (BS 8414)....37
Table 3.5.6 Fire Testing Limitations and Advantages (NFPA 285)....39
Table 3.5.7 Comparison of the Main Characteristics of Three Façade Fire Tests....40
Table 3.5.8 Fire Testing Limitations and Advantages (ASTM E84)....42

©2019-2026 Factory Mutual Insurance Company. All rights reserved.

1.0 SCOPE

This data sheet provides guidance on construction-related fire testing, including small-, intermediate-, and large-scale test methods. It serves as the authoritative source for the comparison and application of these tests and their results. The document focuses on fire performance testing of construction materials, including tests referenced by building and fire codes. It does not address material installation practices or fire protection system requirements.

1.1 Changes

October 2026. Interim revision. Significant changes include the following:

A. Reformatted the document, and added headings to help identify the testing regions.

B. Renamed the document, and clarified the scope to align with construction tests.

C. Added additional test information.

D. Added reference tables on small, intermediate and large-scale fire tests.

2.0 LOSS PREVENTION RECOMMENDATIONS

2.1 Construction and Location

2.1.1 Use noncombustible or FM Approved products for new installations.

2.1.2 Do not use small-scale fire tests as the basis for assessing construction material fire performance, as they may not accurately reflect real-world fire behavior. Refer to Section 3 for detailed test information and acceptance.

2.1.3 For intermediate- and large-scale fire testing, relevance should be assessed against FM Approvals test methods. Heat flux is a critical parameter, and conclusions should not be based solely on heat release rate. Refer to Section 3 for detailed test information and acceptance.

2.1.4 Comparative fire tests or small-scale tests should not be used as the sole basis for classifying plastic building materials, as they may yield misleadingly favorable results. These tests include ASTM E84 (comparative), Single Burning Item (SBI) tests, ignition resistance tests, (e.g., UL 94), and heat of combustion evaluations.

2.1.5 Do not rely on desktop assessments to predict material fire performance. Manufacturing variations can significantly affect fire behavior. Therefore, a repeatable benchmark must be established; and any replacement product should be validated through testing against that benchmark. Replacement materials should be accepted only when performance is equivalent to or better than the baseline. Without proper testing and benchmarking, desktop assessments may create a false sense of safety.

2.2 Small Scale Tests

2.2.1 Table 2.2.1 summarizes commonly-encountered, small-scale fire tests. While the table provides an overview of these methods, small-scale tests are not considered acceptable for material assessment. Refer to Section 3.0 for detailed descriptions and guidance on each test method.

©2019-2026 Factory Mutual Insurance Company. All rights reserved.

Table 2.2.1 Small-Scale Tests

Test Standard	Application	Test Configuration	Fire or Heat Source	Pass or Fail Criteria	Region	Test Standard Acceptable to FM?	Limitations	Section 3 Reference
UL 94 series	Electronic components (small), automotive and appliances	Horizontal and vertical	500 W Bunsen-type burner	Varies by test, measures distance over time	USA	No	Low heat release rate and low heat flux	UL 94 Series
EN 13823 and EN 13501 Single Burning Item	Ignitability of products exposed to flames	Small corner test	30 kW gas burner for 20 min.	Multiple criteria depending on test: fire growth rate, total heat release rate, smoke production, lateral flame spread, flaming droplets	Europe	No	Low heat release rate and low heat flux	Single burning item
ISO 11925-2	Ignitability of products exposed to flames	Vertically mounted specimen	Small propane flame at 45 degree angle to product	Fails if flame reaches 150 mm above impingement point. Application time 15-30 seconds and observed for 20-60 seconds	Europe	No	Small scale test and heat release not measured	ISO 11925-2
ASTM E136	Determines combustibility of a material	Small sample	Electric heat source	Furnace test reporting heat of combustion	USA	No (see definitions in Appendix A)	Furnace test with no flame source	ASTM E136
ISO 1716	Determines heat of combustion of a material	A small powderized sample is burned under heat, high pressure and oxygen	Electric heat source	Furnace test only reporting heat of combustion	Europe	No	Furnace test with no flame source	ISO 1716
ASTM D482	Determines ash content	Heated and ignited to consume organic material	Electric heat source	Furnace test only reporting % inerts not consumed	USA	No	Furnace test with no flame source	ASTM D482
BS 476 (to be phased out in 9 / 2029 & replaced with EN 13501)	Determines building products ignitability and fire resistance	Various small scale test arrangements	Various sources from electric, gas and radiant heat panels	Various results based on type of test, such as temperature rise, heat release or material classification	Europe	No	Varies based on test, but overall low heat release and low heat flux	

©2019-2026 Factory Mutual Insurance Company. All rights reserved.

2.3 Intermediate Scale Tests

2.3.1 Table 2.3.1 summarizes commonly-encountered, intermediate-scale fire tests. These methods provide a progression beyond bench-scale testing but do not fully replicate full-scale fire conditions. While some intermediate-scale tests may provide useful insights, not all are considered acceptable for material assessment. Refer to Section 3.0 for detailed descriptions and guidance on each test method.

©2019-2026 Factory Mutual Insurance Company. All rights reserved.

Table 2.3.1 Intermediate Scale Tests

Test Standard	Application	Test Configuration	Fire or Heat Source	Pass or Fail Criteria	Region	Test Standard Acceptable to FM?	Limitations	Section 3 Reference
FM Duct Test (FMA 4921, 4922, 4923)	Interior fire spread for combustible ducts ≤ 5 ft (1.5 m)	25 ft (7.6 m) of horizontal duct. 1 ft. (0.9 m) in diameter	10,000 Btu / min (175 kW) heptane pan fire entrained into duct, 50 kW / m^2 heat flux for 10 min.	Visual fire spread to a23 ft (7 m) or > 1000°F (°C) 23 ft (7 m).	Global	Yes	N / A	FM Duct test < 5ft (1.5m)
FM Duct Test (FMA 4921, 4922, 4923)	Interior fire spread for combustible ducts > 5 ft (1.5m)	16 ft. PPT test (see FM 4880)	360 kW sand burner, 100 kW / m^2 heat flux for 15 min.	HRR ≤ 830 kW	Global	Yes	N / A	FM Duct Test
FM Fire Propagation test	Test for fire propagation of construction materials correlated to FM Corner Test	Horizontal and vertical	Sample is subject to a series of heat fluxes from 10 kW / m^2 to 60 kW / m^2	Reports only results of test	Global	Yes	N / A	FPA test
FM Roof Calorimeter Furnace Test	Roof deck classification (Class 1 or Class 2)	Roof system is placed on top of furnace	HRR provided is 26,400 Btu / min (464 kW)	Sets maximum heat release rates to be considered Class 1. HRR<410 Btu / ft^2 / min (77.6 kW / ^{2}) 3 min HRR<390 Btu / ft^2 / min (73.8 kW / ^{2}) at 5 min HRR<360 Btu / ft2 / min (68.1 kW / ^{2}) at 10 min Avg HRR <285 Btu / ft2 / min (54 kW / ^{2}) over 30 min	Global	Yes	N / A	
FM Exterior Roof Fire Spread Test FMA 4470	Determines spread of fire of roof cover (Class A, B or C)	Class A fire spread ≤ 6 ft (1.8 m) Class B fire spread is ≤ 8 ft. (2.4 m) over 8 ft (2.4 m) is class C.	The heat release rate for Class A and B is 22,000 Btu / min (387 kW) for 10 min.	Class A fire spread ≤ 6 ft (1.8m) Class B fire spread ≤ 8ft (2.4m) Class C is up to 13 ft (3.9m)	Global	Yes	N / A	
FM Room Corner Test	Wall and ceiling test for flash over	Wooden crib is placed in corner for 15 min.	30 lb. Conditioned wood crib	Does not reach flash over	Global	Yes	N / A	
FM 8 ft. PPT	Determine if a material will propagate a fire.	Vertical parallel panels	60 kW sand propane burner	Flame height < 6 ft (1.8m) and HRR < 100 kW	Global	Yes	N / A	

©2019-2026 Factory Mutual Insurance Company. All rights reserved.

2.4 Large Scale Tests

2.4.1 Table 2.4.1 summarizes commonly-encountered, large-scale fire tests. These methods generally provide the most realistic representation of fire behavior and fire exposure conditions. However, large-scale testing alone does not establish acceptability. Test relevance must be evaluated through a detailed review of the test method, exposure conditions and applied heat flux. Refer to Section 3.0 for detailed descriptions and guidance on each test method.

©2019-2026 Factory Mutual Insurance Company. All rights reserved.

Table 2.4.1 Large Scale Tests

Test Standard	Application	Test Configuration	Fire or Heat Source	Pass or Fail Criteria	Region	Test Standard Acceptable to FM?	Limitations	Section 3 Reference
16 ft PPT ISO 3957 FM 4880 FM 4881 FM 4411	Exterior fire spread of walls / ceilings or facades (insulated metal panels, MCM, HPL or cavity wall systems	Vertical parallel panels	360kW sand propane burner with a 100 kW / m^2 heat flux at 4 ft. (1.2m)	HRR > 1100 kW failed HRR < 1100 kW (up to 50 ft) HRR <830 kW unlimited height	Global	Yes	N / A	16 ft PPT
16 ft PPT ISO 3957 FM 4880	Interior finish spread of walls / ceilings	Vertical parallel panels	360kW sand propane burner with a 100 kW / m^2 heat flux at 4 ft. (1.2m)	> 1100 kW failed < 1100 kW (up to 50 ft) <830 kW unlimited height	Global	Yes	N / A	16 ft PPT
FM Corner Test	Exterior or interior fire spread of ceiling / wall or facades	Vertical test with re-entrant corner	750 lb. Conditioned wood crib	Test for propagation of a wall / ceiling or facade. Fire spread can't reach end of walls	Global	Yes	N / A	Wall corner test
NFPA 285	Exterior Fire Spread - walls	Vertical flat wall	Total 1.2 MW HRR with heat flux of 10 kW / m^2 to 40 kW / m^2 over 30 min.	Flames < 10 ft. above window opening and thermocouple measurements in cavity	USA	No	Low heat flux Non-realistic post flash over fire Flat wall No cavity fire test	NFPA 285
BS 8414-1 and BS 8414-2	Exterior Fire Spread - walls	Vertical wall with a re entrant corner	Wood crib designed to product 75 kW / m^2	Flames < 10 ft. Above window	Europe	No	Lower heat flux No cavity fire test Unconditioned wood crib Repeatability issues	BS 8414
ASTM E84	Comparative surface burning behavior of building materials for walls and ceilings	Horizontal	5,000 Btu / min (88kW)	Comparative test. Provides flame spread and smoke index as compared to benchmark materials.	USA	No	Low heat source Horizontal test Comparative test Melting or shrinking plastics can result in favorable test Code uses as a fire test Result aggravated when product is installed in a ceiling and wall	ASTM E84

©2019-2026 Factory Mutual Insurance Company. All rights reserved.

3.0 SUPPORT FOR RECOMMENDATIONS

3.1 General

Effective fire protection decisions require a combination of practical experience and validated fire testing. Where full-scale testing is not available, only small-scale tests with demonstrated correlation to large-scale fire performance should be used, and solely for comparison of similar products. Tests conducted at heat flux levels below representative post-flash over or exterior fire conditions are not appropriate for fire performance assessment.

Combustibility is evaluated through multiple laboratory bench-scale tests. While sustained ignition indicates combustibility, failure to ignite does not confirm non-combustibility. Large scale tests may be necessary to determine how a product behaves under realistic fire conditions.

Bench-scale fire tests measure characteristics such as ignition, heat release, flame spread, and smoke production, but often do not accurately predict real-world fire performance. Representative fire assessments require appropriate test scale and heat flux.

The absence of sustained flame spread in bench-scale tests does not confirm low combustibility. Materials that self-extinguish under limited test conditions may still exhibit significant combustibility in larger-scale fire exposures.

Bench-scale fire tests are effective for identifying highly combustible materials; however, they are generally insufficient to demonstrate low combustibility or predict performance under realistic fire conditions.

Bench-scale fire tests evaluate fire hazard by measuring flame spread rate, typically expressed as distance traveled over time. While rapid flame spread clearly indicates a significant fire hazard, slow burning or self-extinguishment can be misleading. Materials that perform favorably under bench-scale conditions may still burn intensely and support rapid fire spread when exposed to realistic fire scenarios or larger ignition sources.

3.1.1 Fire Retardants

Fire-retardant additives are commonly used in polymeric materials to reduce flammability. These additives may function by absorbing heat, promoting char formation to limit the release of combustible volatiles during pyrolysis, suppressing gas-phase combustion, or through a combination of these mechanisms. While fire retardants can improve ignition resistance and perform effectively in small-scale tests, their performance may diminish under more severe fire exposures, resulting in significant burning. Fire-retardant treatments do not render a material noncombustible, and their effectiveness may decrease over time due to leaching, volatilization, or environmental exposure, particularly in moisture-sensitive applications such as treated wood.

3.2 Test Data

The following sections provide an overview of construction fire test methods commonly used worldwide and identifies their applicability to real-world fire conditions and their acceptability to FM. When evaluating test methods and reports, applied heat flux is a critical consideration. Test scenarios with high heat release rates but low heat flux—such as NFPA 285—may produce misleadingly favorable results. Tests with lower heat release rates and higher heat flux exposures—such as the 16-ft Parallel Panel Test (PPT)—may provide a more representative assessment of actual fire performance.

The suitability of a fire test for acceptance should be evaluated using engineering judgment that considers test scale, heat release rate, heat flux, repeatability and ignition source, as well as their relevance to actual field conditions.

3.3 Small Scale Tests

This section provides detailed information regarding small scale tests, referenced in this data sheet.

3.3.1 UL94 (Tests for Flammability of Plastic Materials)

A clear understanding of a test standard’s scope and intent is essential for proper application. UL 94 was developed to evaluate small plastic components used in appliances and similar products; its application to building materials is outside its intended scope.

The test is not applicable to materials exceeding 0.5 in. (13 mm) in thickness and is not intended to assess building materials. While it is sometimes used by manufacturers for products such as insulation or reinforced plastic panels, it does not indicate end-use fire hazard. Building codes do not recognize UL 94 ratings as a substitute for required fire performance classifications. Accordingly, FM considers UL 94 unsuitable for evaluating flame spread in building materials.

UL 94 includes multiple methods: rigid plastics are tested in both horizontal and vertical orientations, while foam plastics are evaluated only horizontally. Specimens are conditioned to specified temperature and humidity prior to testing to ensure consistency.

Vertical Burning (UL94 V-0, -1, -2)

©2019-2026 Factory Mutual Insurance Company. All rights reserved.

The specimen is suspended (longitudinal axis vertical) within a ring stand by clamping the upper edge of the specimen. The ring stand is enclosed in a laboratory hood with glass window and exhaust fan. A layer of dry, absorbent cotton is placed on the bench under the specimen.

A specified flame from a Bunsen burner is placed centrally under the lower edge of the test specimen. After 10 seconds the flame is withdrawn from the specimen. The duration of flaming of the specimen is then noted. When flaming ceases, the test flame is immediately replaced under the specimen for another 10 sec. Duration of flaming and glowing is noted.

Materials may be classified as 94 V-0, V-1, or V-2 if testing demonstrates that:

1. No specimen exhibits flaming combustion longer than 10 seconds (V-0) or 30 seconds (V-1, V-2) after each flame application.

2. Total flaming combustion time does not exceed 50 seconds (V-0) or 250 seconds (V-1, V-2) for ten flame applications across each set of five specimens.

3. No specimen burns with flaming or glowing combustion up to the holding clamp.

4. No flaming drips ignite the cotton indicator beneath the specimen.

5. No specimen exhibits glowing combustion beyond 30 seconds (V-0) or 60 seconds (V-1, V-2) after the second flame removal.

6. For V-2 only, no specimen continues to burn to the 4 in. (102 mm) reference mark under 94HB test conditions.

If only one specimen out of five fails to comply, another set of five specimens shall be tested. (See appropriate UL 94 standard for more information.)

Table 3.3.1 Fire Test Limitations and Advantages (UL 94)

Fire Test	*Limitations*	*Advantages*
UL 94 (ISO 9772, ISO 9773, ISO 340)	- Not appropriate for construction materials. - Not accepted by building codes. - Very small size sample and ignition source for testing. - Testing repeatability and scientific basis are questionable.	- None related to construction materials.

3.3.2 Horizontal Burning 94HB

Specimens measure 5 in. by 0.5 in. (127 mm by 13 mm) and are tested at thicknesses of 0.120–0.125 in. (3.1–3.2 mm) or less than 0.120 in. (3.1 mm). Each specimen is marked at 1 in. (25 mm) and 4 in. (102 mm) from one end, then mounted in a draft-free hood with its major axis horizontal and minor axis inclined at 45°, clamped at the end opposite the 1 in. mark.

A wire gauze is positioned horizontally 3 / 8 in. (9.5 mm) below the specimen. A Bunsen burner, adjusted to a specified flame length, is applied to the lower edge at the free end of the specimen to a depth of approximately 1 / 4 in. (6.1 mm) for up to 30 seconds without repositioning. The flame is removed earlier if the specimen burns to the 1 in. (25 mm) mark before the 30-second exposure is complete.

If the specimen burns beyond the 1 in. (25 mm) mark during the 30-second flame application and reaches the 4 in. (102 mm) mark, the elapsed time is recorded to determine the burning rate.

Materials may be classified as 94 HB if testing demonstrates that:

1. No specimen exhibits a burning rate exceeding 1.5 in. (38 mm) per minute over a 3 in. (76 mm) span for thicknesses of 0.120–0.125 in. (3.1–3.2 mm).

2. No specimen exhibits a burning rate exceeding 2.5 in. (64 mm) per minute over a 3 in. (76 mm) span for thicknesses less than 0.120 in. (3.1 mm).

3. No specimen continues to burn to the 4 in. (102 mm) reference mark.

3.3.3 Vertical Burning (94-5V)

Test specimens measure 5 in. by 0.5 in. (127 mm by 13 mm) and are limited to a maximum thickness of 0.5 in. (13 mm).

The Bunsen burner is mounted at a 20° angle from vertical. The specimen is suspended vertically within a draft-free laboratory hood by clamping its upper edge in a ring stand. A flame with a 5 in. (127 mm) height and a 1.5 in. (38 mm)

©2019-2026 Factory Mutual Insurance Company. All rights reserved.

blue cone is applied at a 20° angle to a lower corner of the specimen, ensuring the blue cone just contacts the surface. The flame is applied for 5 seconds and removed for 5 seconds, repeated for a total of five applications.

Materials may be classified as 94-5V, if testing demonstrates that:

1. No specimen exhibits flaming or glowing combustion for more than 60 seconds after the fifth flame application.
2. No specimen produces flaming or non-flaming drips.
3. No specimen experiences significant material loss or damage in the area exposed to the test flame.

If only one specimen out of five fails to comply, another set of five specimens shall be tested. The second set all five must pass (See appropriate UL 94 standard for more information.)

3.3.4 Horizontal Burning 94HBF, 94HF-1, 94HF-2

This test applies to foam plastics, using specimens measuring 6 in. by 2 in. (152 mm by 51 mm) with a maximum thickness of 0.5 in. (13 mm), marked at 1 in. (25 mm), 2.25 in. (57 mm), and 5 in. (127 mm) from one end. Testing is conducted in a draft-free hood, where the specimen is placed on horizontal wire mesh (8 × 3 in. [203 × 76 mm]) with one end raised 0.5 in. (13 mm). The mesh is supported by ring stands, positioned 0.5 in. (13 mm) above a wing-tip burner and 12 in. (305 mm) above a 3 × 3 in. (76 × 76 mm) layer of dry absorbent cotton.

The specimen is placed on the wire mesh with one end against the raised edge. A wing-tip burner is adjusted to produce a 1.5 in. (38 mm) blue flame and positioned beneath the mesh so the flame edge aligns with the raised end, with the burner centered along the longitudinal axis of the specimen.

The flame is applied for 60 seconds and then removed. If combustion continues, the time required for the flame to travel from the 1 in. (25 mm) mark to the 5 in. (127 mm) mark is recorded to calculate the burning rate. If burning ceases before reaching the 5 in. (127 mm) mark, the post-flame burn duration and burn distance are recorded.

Materials may be classified as 94-HBF, if testing demonstrates that:

1. No specimen exhibits a burning rate exceeding 1.5 in. (38 mm) per minute over a 4 in. (102 mm) span, or
2. No specimen continues to burn until the flame reaches the 5 in. (127 mm) mark.
3. No specimen meets the criteria for Class 94 HF-1 or 94 HF-2.

Materials may be classified as 94 HF-1, if testing demonstrates that:

1. No more than one of five specimens continues to flame for more than 10 seconds after removal of the test flame.
2. No specimen continues to flame for more than 10 seconds after flame removal.
3. No specimen is damaged beyond 2.25 in. (57 mm) from the exposed end.
4. No specimen drips flaming particles that ignite the dry absorbent surgical cotton positioned 12 in. (305 mm) below.
5. No specimen exhibits glowing combustion that:
   (a). Persists for more than 30 seconds after removal of the test flame.
   (b). Extends beyond the 2.25 in. (57 mm) mark.

Materials classed 94HF-2 meet the same criteria as 94HF-1, except that in item 4, specimens may drip flaming particles that burn only briefly, some of which ignite the dry, absorbent surgical cotton placed 12 in. (305 mm) below the test specimen.

If one specimen in a set of five fails to meet the requirements, an additional set of five specimens shall be tested, all of which must comply.

3.3.5 Direct Flame Impingement Test: ISO 11925-2, DIN 4102-1

The direct flame impingement test uses a 3.5 in. × 10 in. specimen mounted vertically, as shown in Figure 3.3.5. A small propane burner with a 20 mm flame is applied to the base of the specimen for a specified duration, with no additional applied heat flux. Exposure duration is typically 15 or 30 seconds, depending on code requirements.

Following burner removal, material ignitability, vertical flame spread, and the presence of flaming droplets are evaluated. This test is part of the EN 13501 series for European building material classification.

©2019-2026 Factory Mutual Insurance Company. All rights reserved.

Table 3.3.5 Fire Test Limitations and Advantages (ISO 11925-2)

Fire Test	*Limitations*	*Advantages*
ISO 11925-2 (DIN 4102-1 Single Flame Source Test)	- Small-scale tests and ignition source. - Not representative of real fires; larger-scale testing recommended. - Produces misleading test results for plastics.	- Industry accepted test throughout Europe.

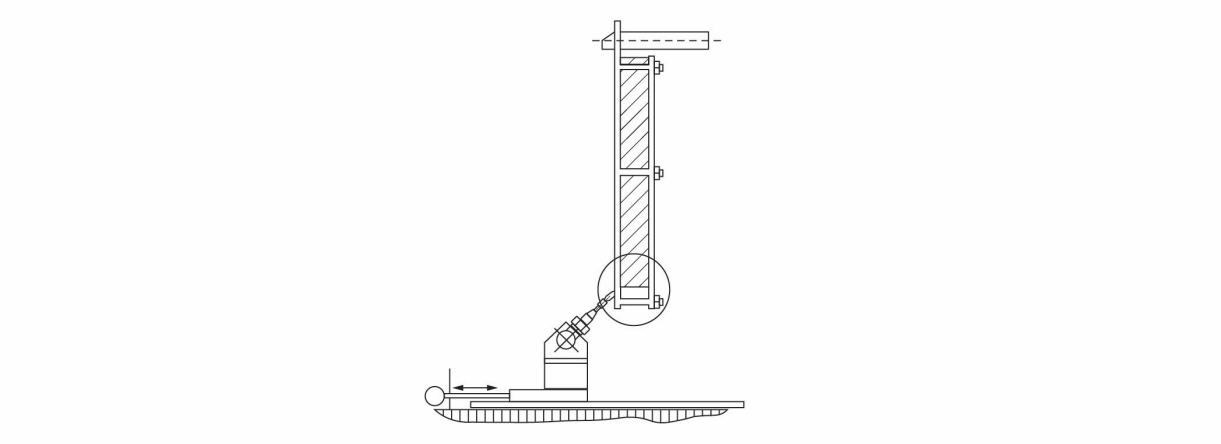

Fig. 3.3.5 Direct flame impingement test (©ISO. This material is reproduced from ISO 11925-2 2010, with permission of the American Standards Institute (ANSI) on behalf of the International Organization for Standardization. All rights reserved)

3.3.6 Total Heat of Combustion Test, ISO 1716

ISO 1716 is an industry-standard test that determines the total heat of combustion by completely burning a 500 mg specimen in a high-pressure (3 MPa) oxygen environment within a constant-volume chamber. It is one component of FM's multi-test framework for assessing non-combustibility and enables comparison of a material's calorific value to that of typical combustibles or plastics. For non-homogeneous materials, individual constituents may require separate evaluation. While the results indicate relative heat release potential, they do not predict material behavior under actual fire conditions.

Table 3.3.6 Fire Testing Limitations and Advantages (ISO 1716)

Fire Test	*Limitations*	*Advantages*
ISO 1716 (Heat of Combustion)	- Requires individual construction components to be tested separately. - Is not stand-alone test for combustibility classification but may be useful in combination with other appropriate tests (see FM non-combustibility test).	- Industry standard material characterization test. - Gives total heat of combustion and repeatable results.

©2019-2026 Factory Mutual Insurance Company. All rights reserved.



Fig 3.3.6 ISO 1716 (Courtesy of Fire Testing Technology)

3.3.7 Ash Content Analysis Test, ASTM D482

This industry-standard test, ASTM D482, determines the ash (noncombustible) content of a material and is used by FM as part of a three-test series to assess non-combustibility. In this procedure, a sample is placed in a 120 mL dish and completely burned in an electric muffle furnace maintained at 775°C ± 25°C.

Table 3.3.7 Fire Testing Limitations and Advantages (ASTM D482)

Fire Test	*Limitations*	*Advantages*
ASTM D482 (Ash Content)	- Requires individual construction components to be tested separately. - Is not stand-alone test for combustibility classification but may be useful in combination with other appropriate tests (see FM non-combustibility test).	- Industry standard material characterization test. - Gives non-combustible composition of material.

3.3.8 Single Burning Item Test

The Single Burning Item (SBI) test is a fire test developed within Europe for reaction-to-fire product classification. See Figure 3.3.8 for a layout of the SBI test apparatus. From an FM perspective, the products of interest being tested and classified per SBI include wall and ceiling panels, and skylights. In Europe, SBI testing is a cornerstone of the Construction Products Directive (CPD), which is a product certification requirement for sale of products within European markets. This SBI test is referred to as EN 13823 and is part of the EN 13501 (European building material classification) test series.

The test method involves a small corner-test structure within an enclosure using two walls to form the corner, and no ceiling. The size of the long and short wings comprising the structure are 40 in. by 60 in. (1000 mm by 1500 mm) and 20 in. by 60 in. (495 mm by 1500 mm), compared to the 8 ft (2.4 m) room test, which uses two 8 ft by 8 ft (2.4 m by 2.4 m) walls to form the corner, and has a ceiling (see Figure 3.3.8). The ignition source for the SBI test is a 30 kW propane gas burner, and the test duration is 20 minutes.

FM has a single burning item test apparatus and the capability of conducting this testing.

The European fire classification scheme that has been developed for construction products is documented in EN 13501-1. This scheme, going from least-combustible to most-combustible / no performance determined, is A1, A2, B, C, D, E, and F. Noncombustible and limited-combustible products, such as metal-faced, mineral wool core panels are included in A1 and A2. Some categories require small-flame ignitability testing (EN ISO 11925-2), as well as the reaction-to-fire SBI testing. Key parameters measured during the SBI test include FIGRA (heat release), SMOGRA (smoke rate), THR (total heat release), and LFS (lateral flame spread).

©2019-2026 Factory Mutual Insurance Company. All rights reserved.

Table 3.3.8 Fire Testing Limitations and Advantages (EN 13823)

Fire Test	Limitations	Advantages
Single Burning Item (SBI, EN 13823)	- Small ignition source. - Produces misleading test results for plastics. - Does not correlate with other, larger-scale fire tests. - Limitation on product thickness for testing.	- Industry accepted test for all products distributed throughout Europe, but being phased out. - Measures heat release rate and smoke.

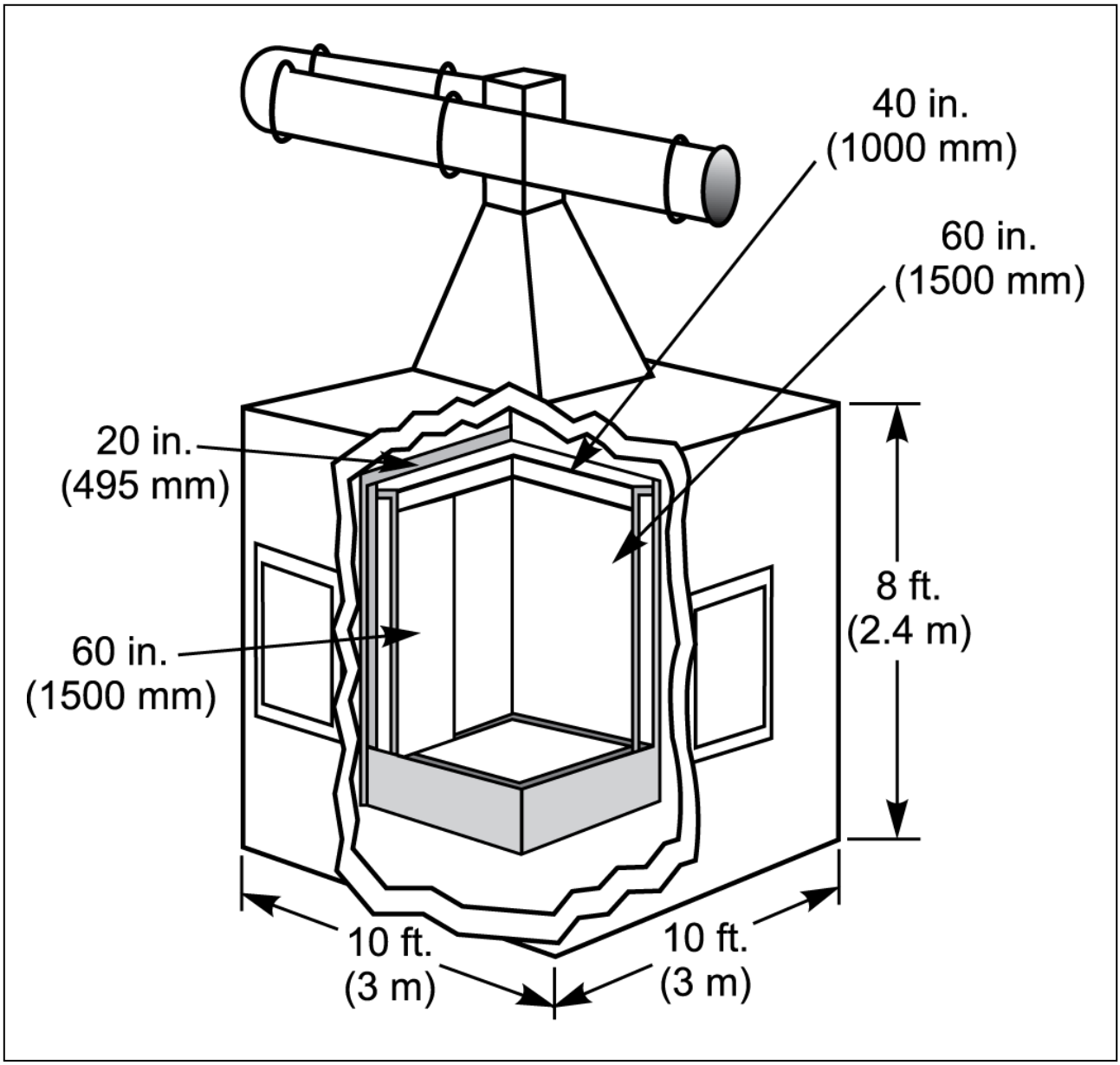

Fig. 3.3.8 Single burning item test apparatus

3.3.9 750°C Furnace Tests for Non-combustibility: ASTM E136/ISO 1182

ASTM E136 and ISO 1182 are 750° vertical furnace tube tests. These tests are used in many building codes to determine the non-combustibility of construction materials. Samples are cut of dimensions 1.5 in x 1.5 in. x 2 in. The sample is dropped inside a furnace maintained at 750 °C for 30 minute duration. Thermocouples are attached to

©2019-2026 Factory Mutual Insurance Company. All rights reserved.

the surface of the sample. The temperature rise, mass loss, and flaming duration of sample are used to determine non-combustibility of material. The test method cannot be applied to coated / laminated materials, and samples that may soften, flow, melt, or intumesce on heating.

FM does not consider tests per ASTM E136 / ISO 1182 standards to be adequate for determining non-combustibility. For non-combustibity see FM non-combustibility definition in Appendix A.

Table 3.3.9 Fire Testing Limitations and Advantages (ASTM E136/ISO 1182)

Fire Test	*Limitations*	*Advantages*
ASTM E136/ISO 1182	- Requires individual construction components to be tested separately. - Not applicable for laminated, coated, or plastic materials. - Limited temperature exposures (750°C) as opposed to real fire conditions. Arbitrary limits for non-combustibility.	- Industry standard material test. - Accepted in some building codes.

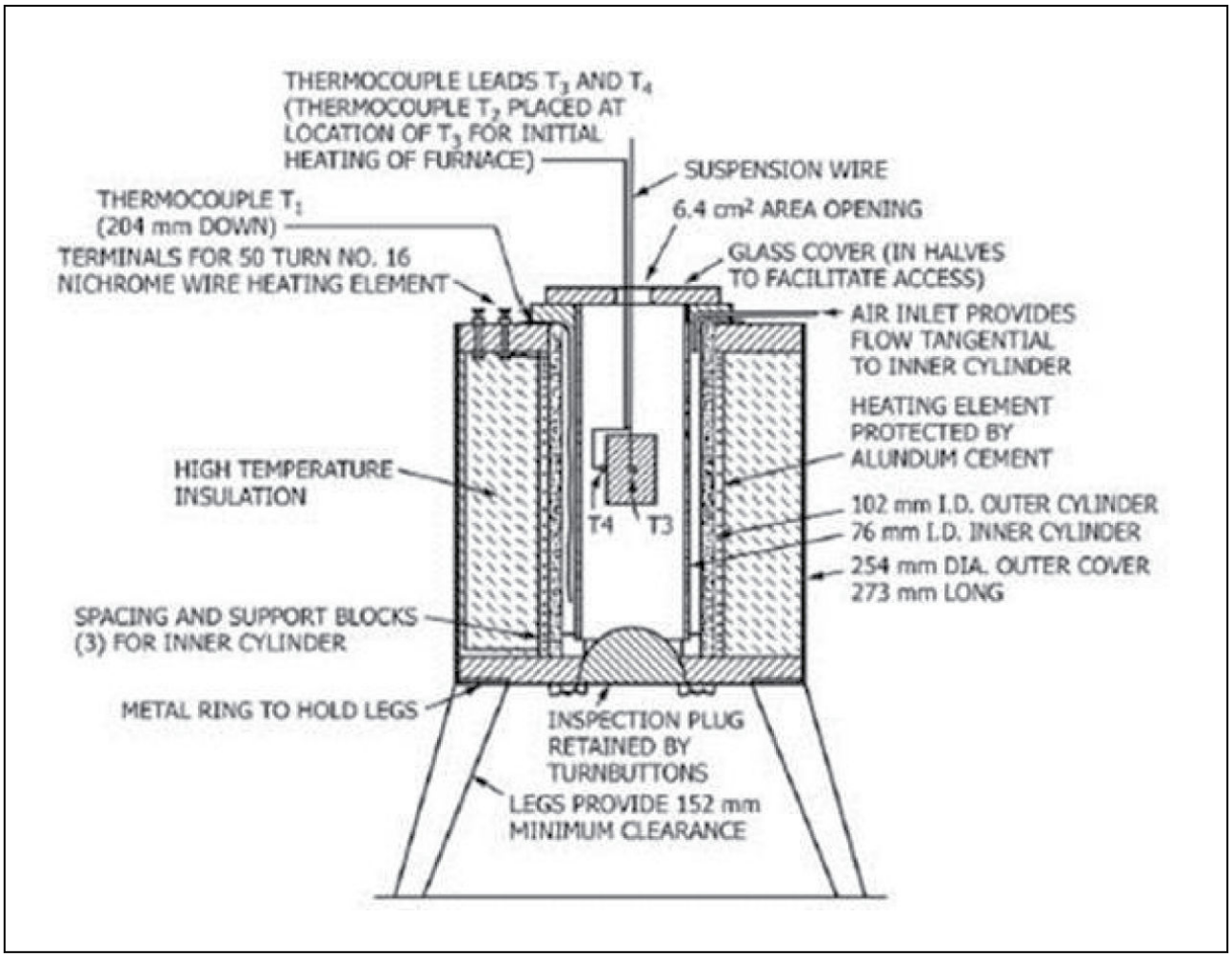

Fig. 3.3.9 Vertical tube furnace Reproduced, with permission from ASTM E136 Standard Test Method for Behavior of Materials in a Vertical Tube Furnace at 750°C, copyright ASTM International, 100 Barr Harbor Drive, West Conshohocken, PA 19428)

3.3.10 FM Fire Propagation Apparatus (FPA) Test

The FM Global Fire Propagation Apparatus (FPA) is a small-scale fire test method developed by FM Global to evaluate the flammability of materials and components. Extensive validation has demonstrated its ability to characterize key aspects of large-scale fire behavior at a laboratory scale. The FPA is recognized as ASTM E2058, incorporated into

©2019-2026 Factory Mutual Insurance Company. All rights reserved.

NFPA 287, and referenced in ISO 12136. It is commonly used to evaluate cleanroom materials, plastic ductwork, wall and ceiling panels, conveyor belts, and cables. The apparatus was designed to measure the fire characteristics most relevant to large-scale fire performance, including the following:

- Response of materials to an external radiant heat source isolated from the test specimen
- Chemical heat release rate, mass loss rate, and smoke generation rate
- Combustion air for both well-ventilated and ventilation-controlled enclosure fires

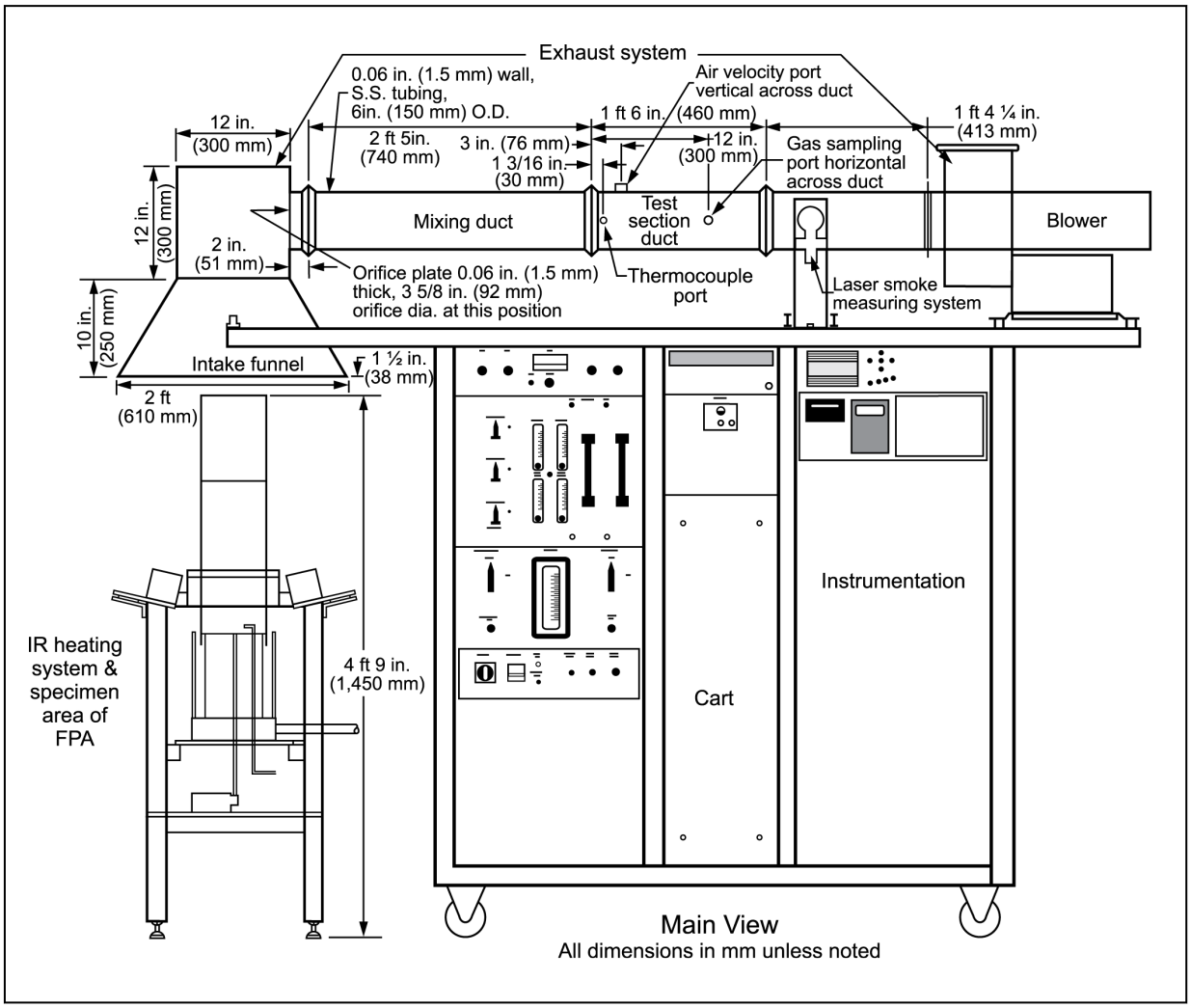

Fig. 3.3.10-1 Fire propagation apparatus

Many fire testing laboratories use fire products collectors to measure heat release and combustion products during large-scale fire testing. The Fire Propagation Apparatus (FPA) applies these same measurement principles at a small scale while exposing specimens to fire conditions representative of large-scale scenarios. This capability provides a more reliable assessment of large-scale fire performance than conventional bench-scale tests and reduces the need for many costly full-scale evaluations. However, intermediate- or large-scale testing may still be required to validate small-scale results for certain applications.

©2019-2026 Factory Mutual Insurance Company. All rights reserved.

Table 3.3.10 Fire Testing Limitations and Advantages (FPA)

Fire Test	*Limitations*	*Advantages*
Fire Propagation Apparatus (FPA, ASTM E2058, ISO 12136, NFPA 287)	- Limited number of testing labs possess the testing apparatus. - Construction assemblies cannot be tested.	- Simulates real fires better than small-scale tests. - Correlates with FM large-scale tests (e.g., FM Corner test, 16 ft PPT). - Measures flammability properties. - Ignition, combustion, pyrolysis, and vertical flame fire propagation can be done.

The Fire Propagation Apparatus (FPA) is used to determine key flammability properties of materials relevant to fire performance assessment. Measured properties can be compared with published data for a wide range of materials, including values reported in the *SFPE Handbook of Fire Protection Engineering*, to provide context for evaluating relative fire behavior.

- FPI (Fire Propagation Index): Parameter to measure vertical fire spread propensity. Higher value represents high propensity.
- SDI (Smoke Development Index): Parameter to measure smoke generated during vertical fire spread. Higher value represents high propensity.
- TRP (Thermal Response Parameter): Parameter to characterize resistance to ignition. High value for materials difficult to ignite.
- CHF (Critical Heat Flux): Minimum heat flux required to sustained ignition. Lower value material ignites easily.
- FSP (Flame spread parameter): Can be used to measure flame spread propensity of certain insulation materials. Higher value represents higher propensity.
- Chemical/Effective heat of combustion: Heat of combustion of material measured under fire conditions.



Fig. 3.3.10-2 FPA testing apparatus

©2019-2026 Factory Mutual Insurance Company. All rights reserved.

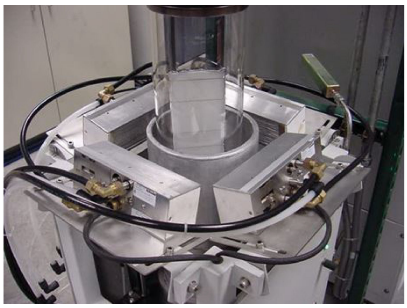

Fig. 3.3.10-3 FPA testing apparatus

3.3.11 Convective Flame Spread Parameters

Convective flame spread is generally characterized by the movement of fire driven by the transfer of heat through the physical circulation of hot gases, and smoke. This is generally the driver for vertical fire spread. This value is obtained from data collected in the FPA.

3.3.12 Other International Fire Tests

Within Europe, the Single Burning Item (SBI) test has become the primary reaction-to-fire classification method. However, many existing construction materials were evaluated under legacy national standards, such as BS 476 (United Kingdom), DIN 4102 (Germany), NF P 92-501 (France), and other country-specific test methods. When interpreting these classifications, it is essential to understand the underlying test methodology and exposure conditions. Many of these tests use small specimens and limited ignition sources, which can restrict their ability to accurately predict the fire behavior of materials under realistic fire conditions.

China's GB 8624-2012 standard classifies the burning behavior of building materials using a framework derived from European standards, including DIN 4102 and BS 476, and is aligned with EN 13501. As with any classification system, the relevance of the resulting rating should be assessed in the context of the underlying test methods, specimen configuration, ignition source, and fire exposure conditions.

3.4 Intermediate Scale Tests

This section provides detailed information on intermediate tests.

3.4.1 Roof-Top Photovoltaics

Research conducted to better understand fire spread in rooftop photovoltaic (PV) systems has shown that PV panels significantly alter the fire dynamics of bare roof assemblies. Studies involving both plastic- and glass-backed PV panels demonstrated that plastic-backed panels contribute to more rapid fire growth. PV panels also modify flame geometry, causing flames that would normally rise vertically or along a roof slope to travel parallel to the roof surface. Testing evaluated the heat flux exposure associated with the ASTM E108 Class A ignition source on both bare roof assemblies and assemblies fitted with simulated PV panels at slopes ranging from 1.2° to 22.6°. Additional testing assessed the influence of panel-to-roof spacing. Results showed that lower roof slopes and panel clearances of approximately 5 to 10 in. (125 to 250 mm) produce the most severe fire exposure conditions.

The FM Approval 4478 test is used to evaluate roof-PV systems. The test is based on a modified E108 test to include the roof cover system and the PV panel (known as the roof-PV system). The PV panel and roof cover are placed at the beginning edge of the test apparatus aSections a system. This configuration allows the wind driven fire to effect both the roof cover and panel at the same time. FM also uses the ASTM E108 test apparatus to evaluate photovoltaic modules under FM 4476, *Examination Standard for Flexible Photovoltaic Modules*.

Based on research, two tests are conducted using severe roofing system configurations: (1) a four-ply, built-up roof and (2) a non-fire-retardant (non-FR) EPDM roof assembly over XPS insulation. To pass either test, fire spread must not extend to within 6 in. (152 mm) of the last PV panel or the perimeter of the roof assembly.

Ignition of the roof covering and insulation is quantified by the critical heat flux, or the rate of heat energy per unit area, required for ignition. For most materials used in roof construction, critical heat flux varies from about 10 to 40 kW / m^2. In

©2019-2026 Factory Mutual Insurance Company. All rights reserved.

the absence of solar panels, radiant heat from the roof fire flame is at an angle of about 90° to the roof surface (or less, depending on flame tilt from wind speed) at the leading edge of the fire. The maximum incident heat flux (the rate of heat energy per unit area that the target is exposed to) occurs when the target, in this case the roof cover, is parallel to the flame surface. When the target is at 90° to the flame surface, the incident heat flux is reduced to about half. Also, the incident heat flux is inversely proportional to the square of the distance from the flame surface. The solar panel redirects or tilts the flame approximately 90°; such that the flame surface is then parallel, and much closer to the roof surface (see Figure 3.4-1).

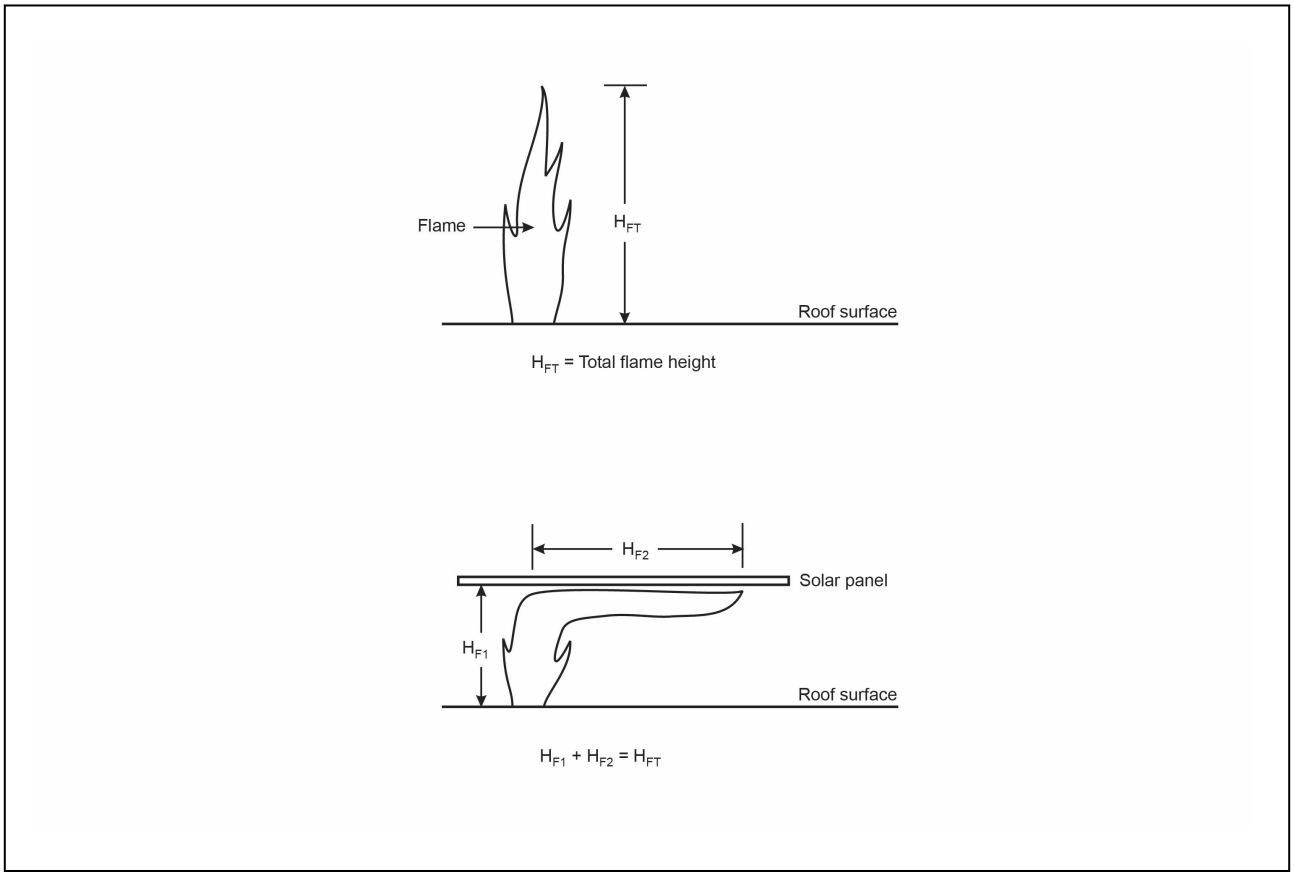

Fig. 3.4.1 Redirection of roof flames by PV panel

This redirect of the flame increases the incident heat flux dramatically, causing greater potential for the roof surface to ignite. In addition, the presence of combustibles such as adhesives and back sheets (polymeric encapsulant) increases the flame area beneath the panels and further increases fire spread. The fire can quickly spread between the roof surface and the PV adhesives and back-sheet.

The only factors that might stop or slow the fire are manual firefighting, aisle spaces between arrays, or positive construction features within the PV / roof construction and at expansion (i.e., dilatation or construction) or control joints.

The UL 1703 fire test utilizes the same basic ASTM E108 test configuration and test apparatus. However, the UL 1703 test places the panel a minimum of 36 in (0.9 m) away from the initial flame. The UL 1703 test assumes that a roof cover fire is the source. FM Approval 4478 does not make that assumption, since an ignition source or electrical equipment can be next to the panels.

The European T3 test (DD / CEN / TS 1187) methods for external fire exposure to roofs should not be accepted, as the incident heat flux exposure is only 12 kW / m2. The typical single ply roof cover will need a critical heat flux of approximately 16-19 kW / m2 to ignite. The PV panel used in the test also blocks a portion of heat exposure to the roof cover. A small brand is placed under the PV panel. The exposure is considered inadequate to represent a PV roof assembly fire exposure.

Testing using the ASTM E108 apparatus is required as part of FM 4476, *Examination Standard for Flexible Photovoltaic Panels*; FM 4478, *Examination Standard for Rigid Photovoltaic Panels*; and FM 4470, *Examination Standard for Single-Ply, Polymer-Modified Bitumen Sheet, Built-Up Roof (BUR) and Liquid Applied Roof Assemblies for use in Class 1 and Noncombustible Roof Deck Construction*.

If arranged realistically, the ASTM E108 spread-of-flame test (modified per FM 4478) provides an indication of potential fire spread with a solar panel located above a roof assembly. In the Class A spread-of-flame test (a 1,400°F [760°C] flame for 10 minutes at a wind velocity of 12 mph [5.4 m / s]), flame spread ratings are described as “effective against

©2019-2026 Factory Mutual Insurance Company. All rights reserved.

severe fire exposure," and are not capable of propagating a fire throughout the solar array(s). Roof assemblies achieving Class A flame spread ratings without PV panels above them have a flame spread that is limited to a maximum of 6 ft (1.8 m). When PV panels are installed above the roof, fire spread with the same assembly could be considerably greater. A larger fire damage area can be expected (even when positive features are present) and accepted, as long as fire spread is controlled. The allowable fire spread per FM 4478 was extended to a maximum of about 16 ft (4.9 m).

Significant differences exist between the UL 1703 fire test and the FM 4478 test for rigid PV modules. The location of the exposure flame with respect to the PV panel is much different. In the UL test, while the roof assembly directly abuts the 3 ft (0.9 m) wide gas flame, the PV module on top of the roof cover is located 3 to 4 ft (0.9 to 1.2 m) upslope from the flame exposure. Consequently, fire spread in the roof assembly may be nearly extinguished before the flames expose the PV module. In the FM 4478 fire test, the PV module and roof assembly both abut the flame exposure, but the maximum allowable fire spread has been increased to about 16 ft (4.9 m). Therefore, installations should not be accepted based on fire ratings per UL 1703 or UL 2703 (regardless of whether the UL rating was based on their old test or the newer one).

3.4.2 FM Duct Test

The FM Duct Test evaluates a representative duct assembly for FM Approval under fire conditions designed to simulate a realistic building fire. A fire exposure is applied beneath the duct inlet, allowing flames and hot gases to be entrained into the duct system. The test assesses the assembly's resistance to ignition and its ability to limit fire propagation throughout the duct length.

This test utilizes a 24-ft (7.32-m) section of duct mounted horizontally, as shown in (Fig. 3.4.2-1). For FM Approval testing, ducts with diameters up to 12 in. (305 mm) are evaluated, with Approval eligibility extending to duct sizes up to 60 in. (1.5 m) in diameter in accordance with FM 4922. The duct is supported 32 in. (813 mm) above the floor, and the inlet end is installed flush with the interior surface of the draft-shield enclosure.

The duct exhaust end is connected to a blower through a steel transition section that draws air through the duct at specified airflow velocities. This configuration simulates in-service air movement and enables evaluation of the duct's fire performance under representative operating conditions.

©2019-2026 Factory Mutual Insurance Company. All rights reserved.

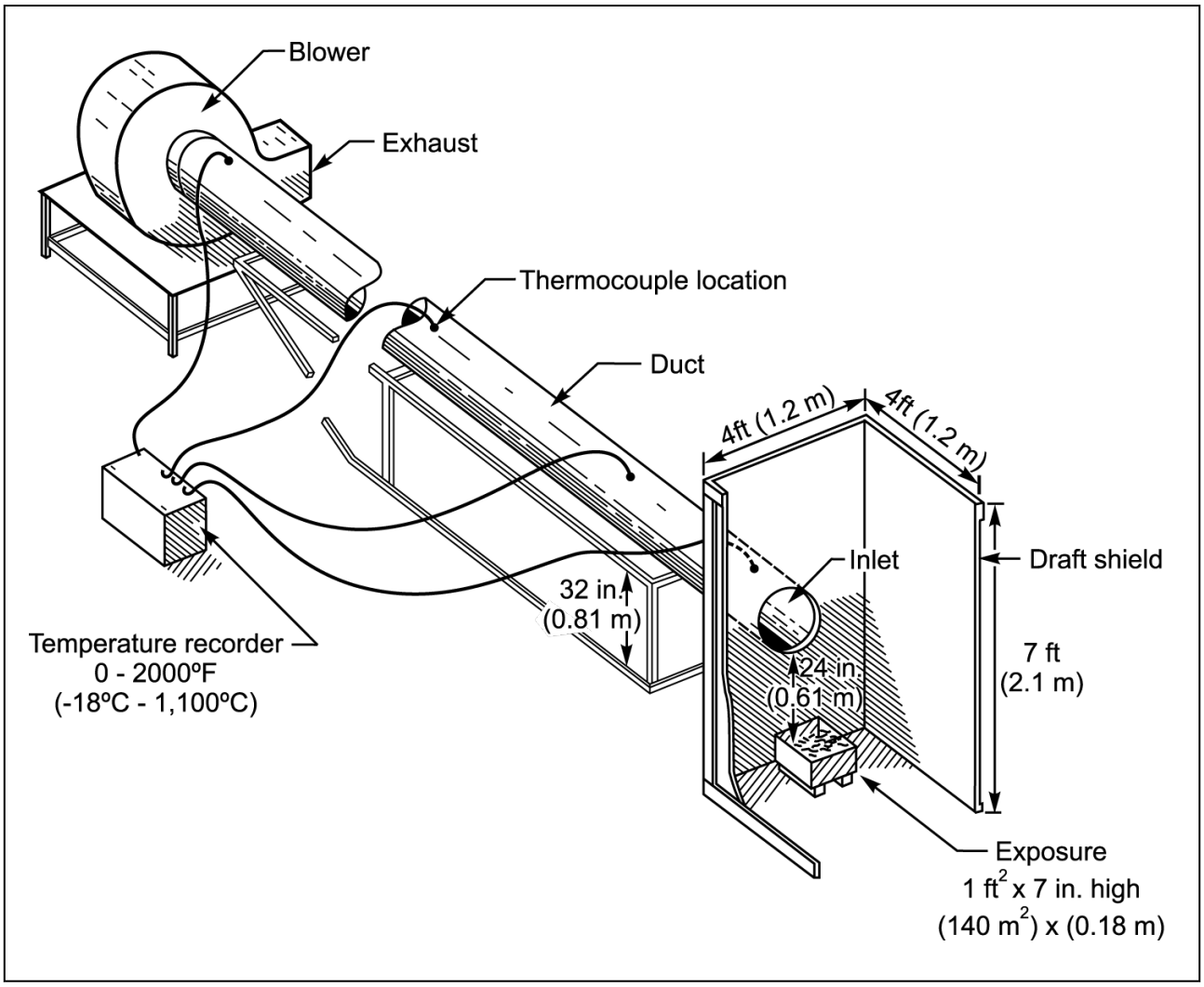

Fig. 3.4.2-1 FM apparatus for the evaluation of industrial exhaust systems

The fire exposure consists of a 12-in. × 12-in. (305-mm × 305-mm) pan containing a 4-in. (102-mm) depth of heptane, producing an approximate heat release rate of 10,000 Btu / min (176 kW). Environmental air ducts are evaluated at an induced airflow velocity of 600 ft / min (3.05 m / s), while chemical and corrosive fume exhaust ducts are tested at 600 ft / min (3.05 m / s) and, where applicable, 2,000 ft / min (10.2 m / s).

Test performance is considered acceptable if flame spread does not reach the 24-ft (7.32-m) endpoint during the 15-minute exposure and the interior duct temperature at the downstream end remains below 1000°F (538°C).

FM Duct Test experience has shown that many plastic duct materials with ASTM E84 flame spread ratings of 25 or less do not perform adequately under realistic fire exposures. This underscores the importance of evaluating assemblies using test methods that assess actual fire propagation behavior rather than relying solely on flame spread classifications.

FM Approvals no longer requires a 15-ft (4.6-m) vertical duct fire test as part of the standard evaluation program. Research has demonstrated that duct assemblies passing the horizontal FM Duct Test also achieve satisfactory performance in the 15-ft vertical configuration. For applications involving vertical runs exceeding 15 ft (4.6 m), a custom vertical duct fire test may be conducted in accordance with FM 4922 to evaluate fire propagation performance.

©2019-2026 Factory Mutual Insurance Company. All rights reserved.



Fig. 3.4.2-2 Vertical duct test

The FM Duct Test is unique in its evaluation of duct fire propagation under representative airflow and fire exposure conditions. No current ASTM or UL test method provides a directly comparable assessment of duct fire performance.

Table 3.4.2 Fire Testing Limitations and Advantages (FM 4921-4923)

Fire Test	*Limitations*	*Advantages*
FM 4921, FM 4922, FM 4923 (Duct Test)	- Limited number of labs have this testing capability and test apparatus.	- Larger scale fire test. Can test any size duct - Can be tested in vertical, horizontal, or customized orientations. - Also used for smoke-sensitive occupancies.

3.4.3 Skylight Testing

FM Approved skylights (FM 4431) are tested in accordance with ASTM E108 to evaluate fire spread resistance, melting and dripping behavior, and structural integrity during fire exposure. Class A assemblies must limit fire spread to 6 ft (1.8 m), while Class B assemblies must limit fire spread to 8 ft (2.4 m). For both classifications, molten or dripping material must not be flaming or glowing when it reaches the floor.

3.4.3.1 European Test for Plastic Skylights

In Europe, plastic skylights are typically evaluated using the Single Burning Item (SBI) test (EN 13823) and ENV 1187 for external fire exposure and flame spread performance. SBI results are used to assign a reaction-to-fire classification in accordance with EN 13501, similar to the classification process for wall and ceiling materials. Roof performance classifications for external fire exposure are assigned under EN 13501-5, resulting in ratings of Broof, Croof, Droof, Eroof, or Froof.

FM's evaluation approach differs significantly from the European methodology, and direct correlation between the respective test results is limited. Consequently, EN 13501 and EN 13501-5 classifications should not be assumed to demonstrate equivalence with FM fire performance criteria.

For plastic skylights receiving less than a Class B classification under European testing, FM recommends additional evaluation using the Fire Propagation Apparatus (FPA). Depending on the FPA results, intermediate-scale testing on FM's modified ASTM E108 apparatus may be required to assess the potential for flame spread across the skylight surface.

©2019-2026 Factory Mutual Insurance Company. All rights reserved.

3.4.4 FM Roof Calorimeter

The FM Roof Calorimeter Furnace Test evaluates the contribution of roof assembly components to fire growth by measuring heat release from the underside of the assembly during fire exposure. The test is conducted with a roof assembly mounted over a furnace, where a controlled fire exposure is applied beneath the deck. Assembly performance is determined by comparing the measured heat release to that of a noncombustible reference specimen.The test specimen measures 5 ft × 5.5 ft (1.5 m × 1.7 m) and is exposed for 30 minutes. Heat release rates are recorded at specified intervals throughout the test, and an average heat release rate is calculated for the full test duration. The maximum average heat release rate is used to classify the roof assembly as Class 1 or Class 2. Applicable acceptance criteria are provided in Table 3.4.4.

Table 3.4.4 Roof Assembly Class 1 Criteria

Time Interval (min.)	Btu/ft^2 min	kW/m^2
3	410	77.6
5	390	73.8
10	360	68.1
30	285	54



Fig. 3.4.4 Roof Calorimeter

©2019-2026 Factory Mutual Insurance Company. All rights reserved.

3.4.5 ASTM E108

ASTM E108 is used to evaluate roof covering systems for resistance to exterior fire exposure, surface flame spread, and fire penetration through the roof assembly. The test assesses the ability of the roof covering to limit flame propagation, resist transmission of fire to the underside of the roof deck, and prevent the generation of flying burning material (firebrands). Based on performance, roof coverings are assigned a Class A, Class B, or Class C rating.

In the Class A and B spread of flame test, a flame is used to produce a 1400°F (760°C) temperature on the deck. This produces approximately a 22,000 Btu / min (387kW) heat release rate. This exposure is applied for 10 minutes, including a wind velocity of 12 mph (5.4 m / s).

Table 3.4.5 provides the maximum flame (fire) spread on the exterior of the roof and its associated class.In the ASTM E108 Class A and Class B flame spread test, a fire exposure is applied to produce a deck temperature of approximately 1400°F (760°C), corresponding to a heat release rate of about 22,000 Btu / min (387 kW). The exposure is maintained for 10 minutes under a prescribed wind speed of 12 mph (5.4 m / s). Roof covering performance is evaluated based on the extent of exterior flame spread, with classifications assigned according to the criteria summarized in Table 3.4.5.

Table 3.4.5 Exterior Roof Classifications

Roof Classification	Maximum Flame Spread
Class A	6 ft (1.8m)
Class B	8 ft (2.4m)
Class C	> 8ft < 13 ft (>2.4m < 3.7m)



Fig. 3.4.5 ASTM E108 Apparatus

3.4.6 FM Room Corner Test

The FM Room Corner Test evaluates the fire performance of interior wall and ceiling finish materials by assessing flame spread and the potential to induce flash over. Test specimens are installed on the walls, ceiling, or both, consistent with their intended application, and include the underlying substrate representative of the actual construction.

The test enclosure measures 8 ft × 8 ft × 8 ft (2.4 m × 2.4 m × 2.4 m). A 30-lb (13.6-kg) wood crib positioned in a corner provides the ignition source and fire exposure. Material performance is evaluated based on fire growth and flash over development. The test is considered successful if the assembly does not result in flash over during the exposure period.

©2019-2026 Factory Mutual Insurance Company. All rights reserved.



Fig. 3.4.6 FM room corner test

3.4.7 8 ft. Parallel Panel Test (PPT)

The FM 8-ft Parallel Panel Test (PPT) was developed to evaluate thermally thin construction materials and materials used in hot- and cold-aisle configurations within data processing facilities. Materials successfully evaluated using this method may be suitable for wall, ceiling, or combined wall-and-ceiling applications.The test utilizes two parallel panels, each measuring 8 ft high by 2 ft wide (2.4 m × 0.6 m), spaced 1 ft (0.3 m) apart. A propane sand burner positioned between the panels provides a 60 kW fire exposure. The total test duration is 12 minutes, consisting of a 10-minute burner exposure followed by a 2-minute observation period with the burner extinguished.

The fire criteria for the construction material panels to pass the 8 ft parallel panel test are:

- visual flame height does not exceed 6 ft (1.8 m),
- heat flux measured at 4 ft (1.2 m) above the sand burner does not exceed 40 kW/m2,
- heat release rate 2 minutes after the burner is shut off falls to or below 25% of that maximum heat release rate observed 10 seconds before the burner is shut down,
- smoke generation rate is less than, or equal to, 0.23 g/s (0.0005 lb/s),
- smoke generation at 12 min. is less than, or equal to, 0.07 g / s (0.0002 lb / s) and 6.

  total smoke is less than, or equal to, 60 g (0.13 lb).

©2019-2026 Factory Mutual Insurance Company. All rights reserved.



Fig. 3.4.7 8 ft PPT Layout

3.5 Large Scale Tests

This section provides detailed information on the large scale tests referenced in the data sheet.

©2019-2026 Factory Mutual Insurance Company. All rights reserved.

3.5.1 FM Corner Fire Tests (ANSI/FM 4880)

From the 1970s through the early 2000s, FM utilized 25-ft and 50-ft Corner Fire Tests to evaluate the fire performance of exterior and interior wall assemblies. These large-scale tests were developed to simulate realistic fire scenarios involving combustible fuel packages located in vertical corner configurations, such as dumpster fires adjacent to building walls. The tests provided a representative assessment of flame spread and fire propagation behavior under severe, real-world exposure conditions.

Figures 3.5.1-1 and 3.5.1-2 illustrate the 25-ft and 50-ft Corner Fire Test configurations. In the 25-ft (7.6-m) test, two 25-ft (7.6-m) high walls form a right-angle corner, with wall lengths of 50 ft (15.2 m) and 40 ft (12.2 m). In the 50-ft (15.2-m) test, two 50-ft (15.2-m) high walls, each 20 ft (6.1 m) long, form the corner configuration. Thermocouples are installed at designated locations on the exterior surface of the wall assembly to monitor temperature development and fire propagation during the test.

Table 3.5.1-1 Fire Testing Limitations and Advantages (FM Corner Test)

Fire Test	*Limitations*	*Advantages*
FM Corner Test (25 ft and 50 ft)	- Ignition source is a 750 lb. wood crib .	- Large-scale test replicating realistic building size fire conditions.

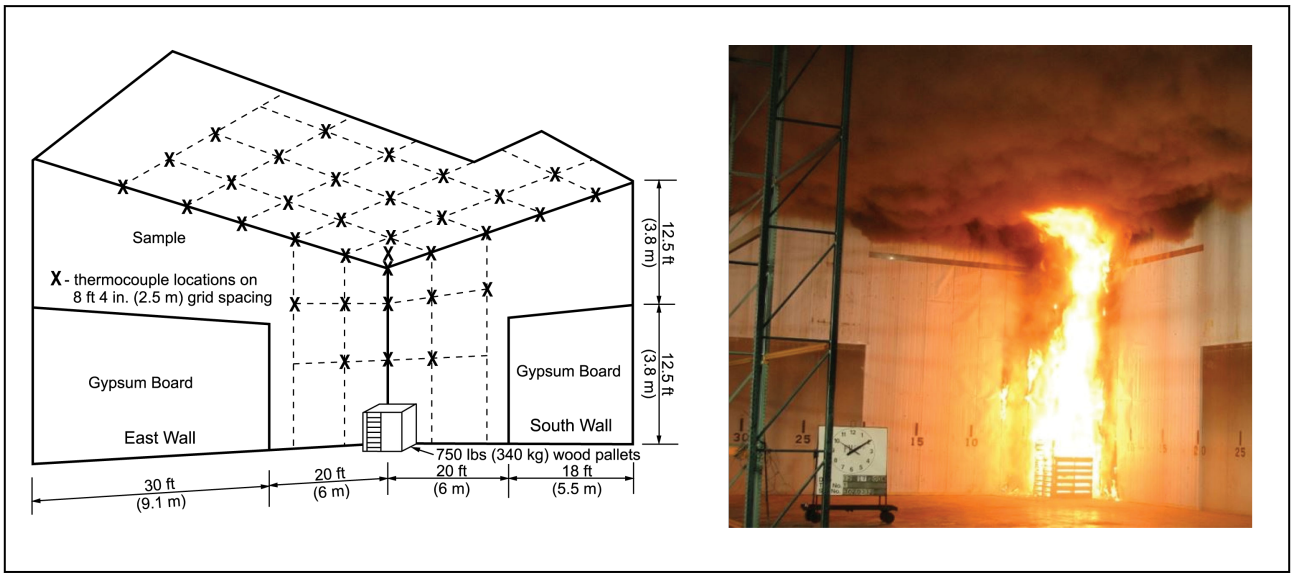

Fig. 3.5.1-1 ANSI/FM 4880 corner fire test - 25-ft test

©2019-2026 Factory Mutual Insurance Company. All rights reserved.

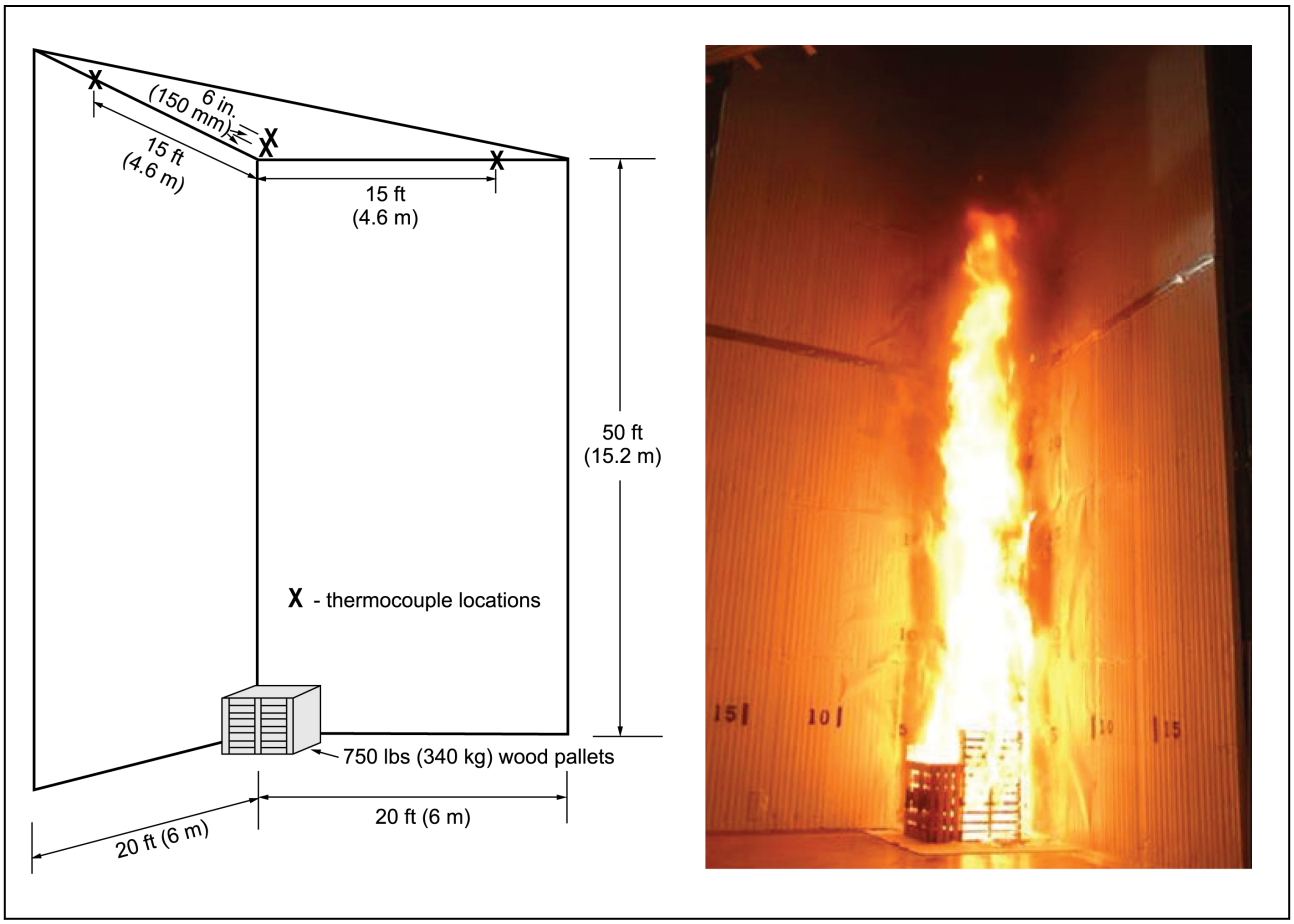

Fig. 3.5.1-2 ANSI/FM 4880 corner fire test - 50-ft test

Both Corner Fire Tests use a 750 ± 10 lb (340 ± 4.5 kg) oak wood pallet fuel package positioned 1 ft (0.3 m) from each wall surface. This fire source produces a peak heat flux of approximately 100 kW / m² on the wall assembly and is intended to simulate a severe, realistic fire exposure. The test duration is 15 minutes.Wall assembly performance is evaluated based on the extent of fire propagation during the test. Depending on the observed fire spread, assemblies may be approved for installation heights of up to 30 ft (9.1 m), 50 ft (15.2 m), or unlimited height, in accordance with the applicable acceptance criteria. Table 3.5.1.

Table 3.5.1-2 ANSI/FM 4880 Performance Criteria for Wall Assemblies Based on Corner Fire Tests

Approval Height	*Test Type*	*Test Criteria*
30 ft (9.1 m)	25 ft corner fire test	Fire does not reach eave wall extremities of test setup.
50 ft (15.2 m)	50 ft corner fire test	Fire does not reach eave wall extremities of test setup.
Unlimited	50 ft corner fire test	Fire does not reach ceiling of test setup.

Figures 3.5.1-3, 3.5.1-4 and 3.5.1-5 depict typical 25 ft (7.6 m) corner tests on plastic materials. See Figure 3.5.1-6 for a layout of the FM 50 ft (15.2 m) corner fire test.

©2019-2026 Factory Mutual Insurance Company. All rights reserved.

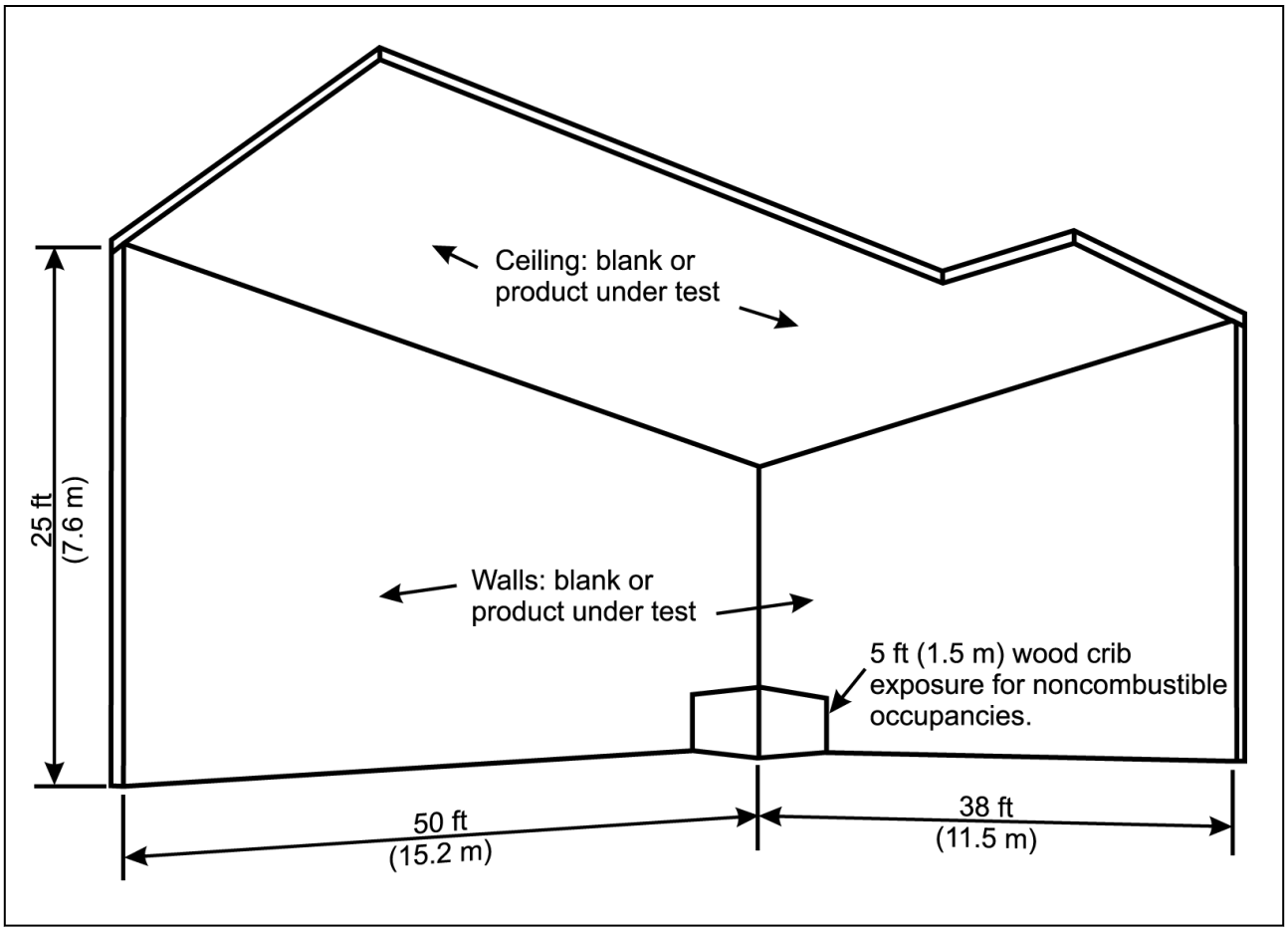

Fig. 3.5.1-3 FM 25 ft (7.6 m) corner fire test

©2019-2026 Factory Mutual Insurance Company. All rights reserved.



Fig. 3.5.1-4 FM corner test of reinforced plastic (flame spread = 25)

©2019-2026 Factory Mutual Insurance Company. All rights reserved.



Fig. 3.5.1-5 FM corner test (This polyurethane was rated ‘‘self extinguishing’’ by a small-scale test)

©2019-2026 Factory Mutual Insurance Company. All rights reserved.

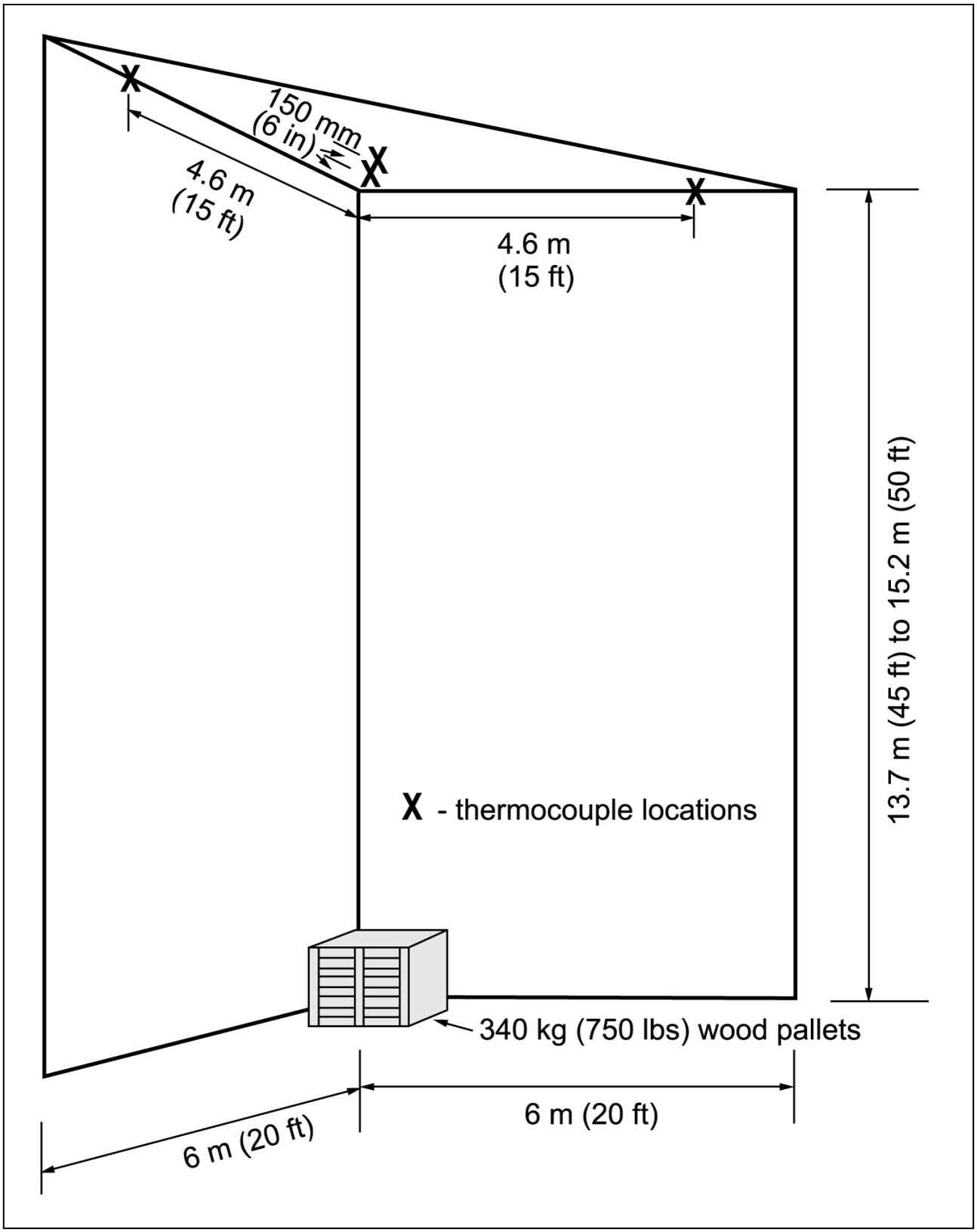

Fig. 3.5.1-6 FM 50 ft (15.2 m) corner test

©2019-2026 Factory Mutual Insurance Company. All rights reserved.

3.5.2 FM 16 ft Parallel Panel Tests (16 ft PPT)

The 16-ft (4.9-m) Parallel Panel Test (PPT) was developed in the early 2000s to incorporate key fire exposure characteristics of the FM Corner Fire Tests while providing a more cost-effective, repeatable, and efficient test method. Correlation studies have demonstrated good agreement between 16-ft PPT results and large-scale corner fire test performance.The 16-ft PPT is used to evaluate the fire propagation characteristics of both interior and exterior wall assemblies, including sandwich panels, aluminum composite material (ACM) and metal composite material (MCM) systems, and single-skin wall constructions.

The FM 16-ft (4.9-m) Parallel Panel Test (PPT) has gained international recognition through its adoption as ISO 3957, *Reaction to fire tests — Parallel panel test method for wall systems — Measurement of heat release and smoke production*. This standard establishes a globally-recognized, large-scale test method for evaluating fire propagation, heat release and smoke production characteristics of wall assemblies under representative fire exposure conditions.

The 16 ft (4.9- m) PPT is used in the following FM Examination Standards:

- FM 4411, *Cavity Wall Systems*
- FM 4483, *Building Integrated Photovoltaic Wall Mounted Systems*
- FM 4880, *Class 1 Fire Rating of Building Panels or Interior Finish Materials*
- FM 4881, *Class 1 Exterior Walls*
- FM 4882, *Class 1 Interior Wall and Ceiling Materials or Systems for Smoke Sensitive Occupancies*
- FM 4883, *Insulated Wall Curtain Products*
- FM 4921, *Fume and Smoke Exhaust Duct Systems*
- FM 4922, *Fume and Smoke Exhaust Duct Systems for Cleanrooms*
- FM 4923, *Fume Exhaust Duct Systems*

The 16-ft (4.9-m) Parallel Panel Test (PPT) consists of two wall panels, each 16 ft (4.9 m) high and 3.5 ft (1.1 m) wide, mounted on insulated backing and separated by 1.75 ft (0.5 m), as shown in Figure 3.5.2. A propane sand burner positioned at the base between the panels serves as the ignition source and provides a 360 kW fire exposure. The burner generates an incident peak heat flux of approximately 100 kW / m² on the wall surfaces, representing a severe and realistic fire condition.The test assembly is located beneath a 5 MW fire products collector, which is used to measure heat release rate (HRR) and smoke production throughout the exposure. These measurements provide a quantitative assessment of fire propagation, fire growth, and smoke generation for the wall assembly being evaluated.

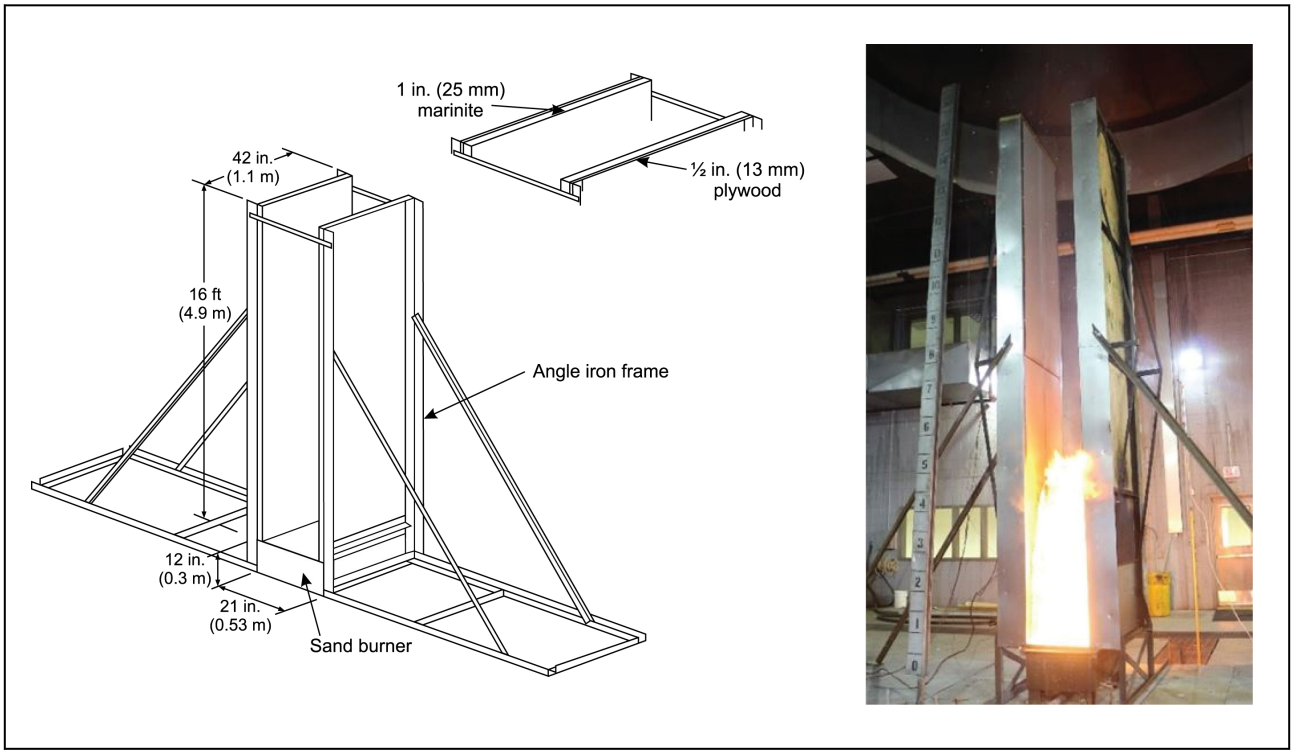

Fig. 3.5.2 Schematic and picture of a 16 ft (4.9 m) PPT

Wall assembly performance in the 16-ft Parallel Panel Test (PPT) is evaluated based on the peak heat release rate (HRR) measured during the first 15 minutes of the test. Depending on the test results, assemblies may be approved

©2019-2026 Factory Mutual Insurance Company. All rights reserved.

for installation heights up to 50 ft (15.2 m) or for unlimited height, as specified in Table 3.5.2-1. The wall assembly is considered to fail, if the peak HRR is greater than 1100 kW. Performance criteria should always be verified against the applicable FM Examination Standard. As the use of the 16-ft (4.9-m) Parallel Panel Test (PPT) has expanded across a broader range of products and applications, additional acceptance criteria and modifications have been incorporated into certain FM Examination standards beyond the baseline requirements summarized in Table 3.5.2-1.

Table 3.5.2-1 ANSI/FM 4880 Approval Criteria for Wall Assemblies Based

Approval Height	*Test Type*	*Test Criteria*
50 ft (15.2 m)	**16 ft (4.9-m) PPT**	**830 < Peak HRR ≤ 1100 kW**
Unlimited	16 ft (4.9-m) PPT	Peak HRR ≤ 830 kW

More recently, the 16-ft (4.9-m) Parallel Panel Test (PPT) has been used to evaluate the smoke generation characteristics of interior wall assemblies intended for smoke-sensitive occupancies, including cleanrooms, pharmaceutical manufacturing and storage facilities, food processing and storage areas, and other environments where smoke contamination can result in significant loss. Acceptance criteria for smoke performance are defined in FM Examination Standard 4882.

Table 3.5.2-2 Fire Testing Limitations and Advantages (FM 4880/4411)

Fire Test	*Limitations*	*Advantages*
ANSI/FM 4880, FM 4881, FM 4882, FM 4411, ISO 3957 (16 ft parallel panel test)	- Limited number of testing labs have the testing capability and testing apparatus.	- Large-scale fire test with a realistic heat flux. Higher than NFPA 285 and BS 8414. - Full wall assembly test - Measures heat release rate and is repeatable. - Can also be used for smoke-sensitive installations (FM 4882)

Insulated Wall Curtains

Research testing utilized a modified 16-ft (4.9-m) PPT with adjusted heat release rate criteria to reflect the protection provided by automatic sprinklers. Although no insulated wall curtain systems are currently FM Approved, the Examination standard provides both fire performance and smoke criteria for evaluating these systems, including applications in smoke-sensitive occupancies.

Wall Mounted, Building-Integrated Photovoltaic (BIPV) Facade Systems

FM Research conducted a study to evaluate fire propagation characteristics of building-integrated photovoltaic (BIPV) façade systems using the 16-ft (4.9-m) Parallel Panel Test (PPT) in accordance with FM Examination Standard 4411. The research focused on wall-mounted BIPV applications, including cavity-wall assemblies and flexible BIPV modules, to better understand their fire performance under representative fire exposure conditions.

Building-integrated photovoltaic (BIPV) façade systems are installed on building exteriors to generate electrical power. These systems typically incorporate a cavity behind the PV modules to accommodate wiring, mounting components, insulation, drainage and weather-resistant barriers. While these cavities can enhance building performance, they also introduce potential pathways for concealed fire propagation. The 16-ft (4.9-m) Parallel Panel Test (PPT) effectively captured the fire propagation behavior of unenergized BIPV cavity-wall façade systems. During testing, exposure from the propane burner fractured the lower glass PV modules, allowing flames to enter the cavity. Fire spread within the cavity was driven by combustible gases released from cables and polymeric encapsulant materials following glass breakage. As fire propagated upward through the cavity, flames emerged through façade joints and openings, igniting mounting adhesives and generating significant flaming debris. The collapse and breakage of PV modules exposed combustible encapsulants directly to the fire source, resulting in additional heat release rate (HRR) peaks and accelerated fire growth. These results demonstrated that fire performance of BIPV façades is governed by the interaction of the complete system—including modules, cavities, wiring, adhesives and mounting components—rather than by individual materials alone. Accordingly, BIPV façade systems should be evaluated using representative large-scale fire tests, such as the 16-ft (4.9-m) PPT, to accurately assess fire propagation potential and system performance.

Testing of flexible BIPV systems demonstrated rapid fire growth and accelerated flame spread, with flame heights extending well beyond the 16-ft (4.9-m) test configuration. In both open-channel (OC) and mechanically attached panel (MP) assemblies, peak heat release rates (HRR) of approximately 11 MW were reached within 100 seconds of ignition. Unlike glass-faced BIPV cavity-wall systems, where fire propagation was largely driven by cavity effects following glass failure, flexible BIPV assemblies exhibited fire growth dominated by surface flame spread across the laminated polymeric superstrate. These results highlight the significant fire propagation potential of flexible BIPV systems and the importance of evaluating their performance using representative large-scale façade fire tests. Flexible BIPV systems exhibited rapid

©2019-2026 Factory Mutual Insurance Company. All rights reserved.

flame spread and severe fire growth with peak HRRs of approximately 11 MW occurring within 100 seconds and flame heights exceeding the 16-ft (4.9-m) test apparatus. Unlike glass-faced BIPV systems, fire propagation was dominated by surface flame spread across the laminated polymeric superstrate, demonstrating the need for large-scale fire testing to accurately assess performance.

3.5.3 FM 4411

FM Research has conducted fire testing on a variety of weather-resistant barriers (WRBs) using FM Examination Standard 4411 for cavity-wall systems. Fire performance of a weather-resistant barrier depends on numerous factors, including barrier composition, cavity depth, air-gap dimensions, channel configurations, and the presence of cavity or fire-blocking barriers. As a result, fire performance cannot be assessed based solely on the WRB material itself. Although WRBs are commonly evaluated using ASTM E84 and are included within large-scale system tests such as NFPA 285 and BS 8414, these methods do not directly evaluate fire propagation within a representative cavity. Therefore, caution should be exercised when interpreting test results for cavity-wall applications.

Weather-resistant barrier (WRB) performance observed during NFPA 285 testing should not be relied upon as a predictor of fire propagation within cavity-wall assemblies. NFPA 285 was not developed to evaluate cavity fire spread, and the test does not provide a representative assessment of fire behavior within concealed air spaces. As a result, WRB performance in NFPA 285 may have limited value when assessing cavity-fire hazards.

3.5.4 Large Diameter Duct Test

FM Research conducted a comprehensive testing program to better understand the fire protection requirements of combustible duct systems and to support the development of FM Examination Standards 4921, 4922, and 4923. These standards were developed in response to the use of very large combustible exhaust ducts in the semiconductor industry, but their application extends to a wide range of industries utilizing large-diameter duct systems.

The research incorporated a series of small-, intermediate-, and large-scale fire tests designed to evaluate fire propagation, ignition resistance and protection requirements. Large-scale testing included a 6.5-ft (2.0-m) diameter duct assembly with a 33-ft (10-m) downstream duct section, connected to a combustion chamber, to provide a representative assessment of fire behavior in large industrial duct systems.

3.5.5 BS 8414

BS 8414-1 and BS 8414-2 are large-scale façade fire tests used in the United Kingdom to evaluate external wall systems attached to masonry substrates and structural steel frames, respectively. The test methods define the specimen configuration, fire exposure, and test procedures, while acceptance criteria are established in BR 135, *Fire Performance of External Thermal Insulation for Walls of Multistorey Buildings*.

The test configuration consists of a corner assembly incorporating a main wall and wing wall, each with a minimum height of 26 ft (8 m). The main wall is at least 8 ft (2.4 m) wide and the wing wall at least 4 ft (1.2 m) wide. A combustion chamber located at the base of the main wall contains a wood crib fuel package that generates a peak incident heat flux of approximately 75 kW / m² on the façade surface.

The test is intended to evaluate fire propagation within and over external wall systems under a representative large-scale fire exposure, including the effects of façade components, insulation, cavities, and cladding materials.

©2019-2026 Factory Mutual Insurance Company. All rights reserved.

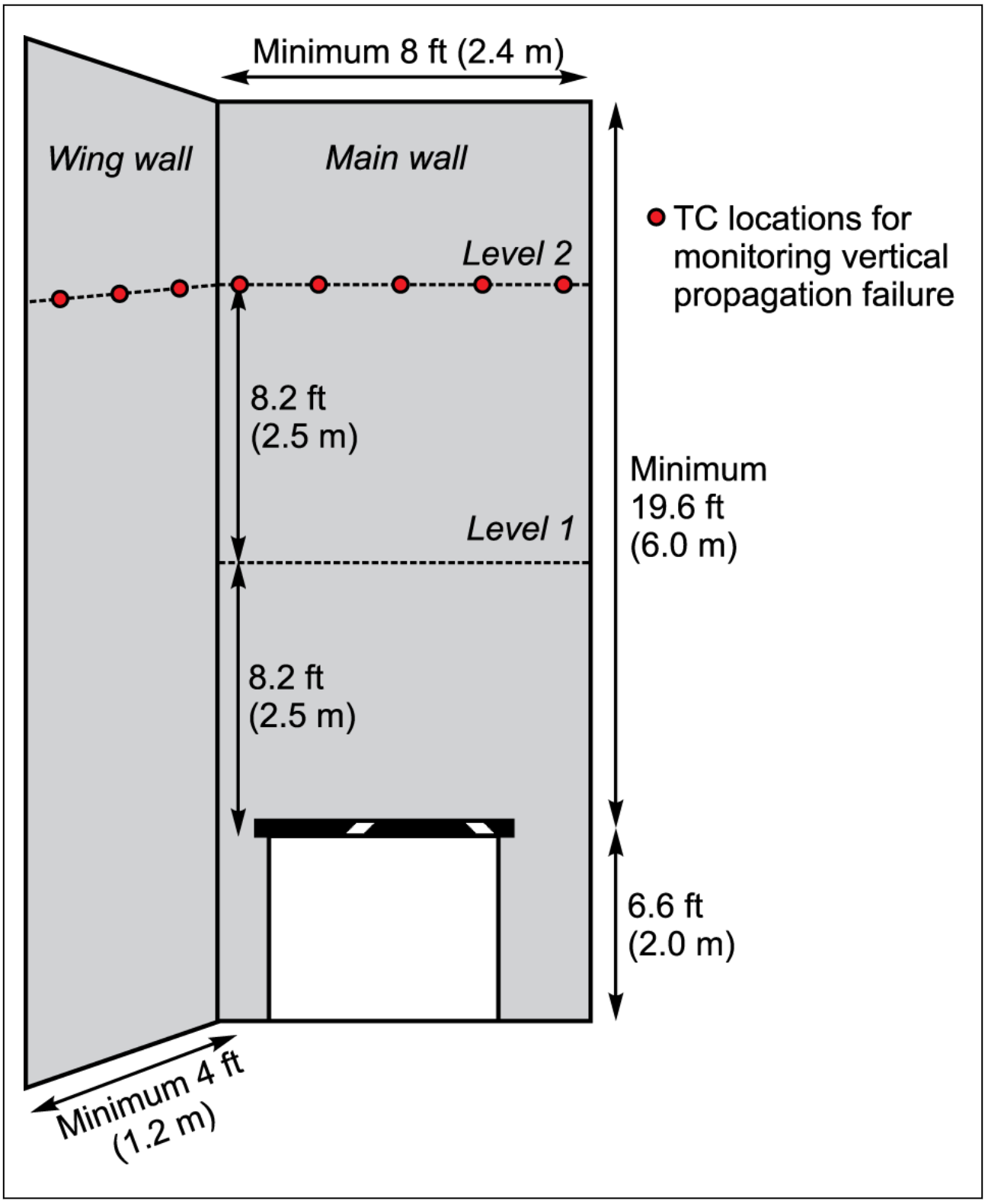

Fig. 3.5.5 Schematic of wall specimen and dimensions in BS-8414-1 (not to scale)

During the 30-minute fire test, temperatures are monitored in front of the wall, inside air cavities, and inside insulation at Level 1 and Level 2; Level 1 and Level 2 locations are 8.2 ft (2.5 m) and 16.4 ft (5.0 m) heights above the window opening, respectively. The fail criteria detailed in BR 135 for a wall assembly are detailed below:

©2019-2026 Factory Mutual Insurance Company. All rights reserved.

A. Exterior temperature at Level 2 is 1110°F (600°C) above the ambient temperature, for at least 30 s duration within 15 minutes of fire spread start time.

B. Air cavity or insulation temperature at Level 2 is 1110°F (600°C) above the ambient temperature, for at least 30 s duration within 15 minutes of fire spread start time.

BS 8414 is a similar test to NFPA 285. BS 8414 has two different tests. The test chosen is based upon the backing material (masonry vs. steel stud). BS 8414 includes a wing wall, which adds radiative heat back into the fire test and uses a more realistic fire size of 75 kW / m^2 ; but this is still below what is considered a modern post flash over fire. Like NFPA 285, temperatures are measured in front of the wall, inside the air cavity and inside insulation. Concerns with this test include a lower heat flux exposure than is currently realistic, issues with repeatability due to the ignition source (unconditioned wood crib), lack of exterior fire exposure and lack of cavity fire test.

Table 3.5.5 Fire Testing Limitations and Advantages (BS 8414)

Fire Test	*Limitations*	*Advantages*
BS 8414	- Issues with testing repeatability due to ignition source. - Uses thermocouples for flame spread evaluation, which are point sources.	- Large-scale test with a higher heat flux than NFPA 285. - Full wall assembly test recognized in UK and Australia building codes.

3.5.6 NFPA 285

NFPA 285 is a two-story façade fire test that evaluates the fire performance of exterior wall assemblies subjected to a window plume exposure representative of a post-flashover compartment fire. The test apparatus consists of a wall assembly 17.5 ft (5.3 m) high and 13.5 ft (4.1 m) wide, as shown in Figure 3.5.6. The lower story contains a window opening measuring 2.5 ft (0.8 m) high by 6.5 ft (2.0 m) wide Figure 3.5.6. The fire exposure is generated using two propane burners: one located within the lower compartment and a second positioned beneath the window opening. Together, these burners create a spill-plume exposure that evaluates the potential for vertical and lateral fire propagation within the exterior wall assembly.

©2019-2026 Factory Mutual Insurance Company. All rights reserved.

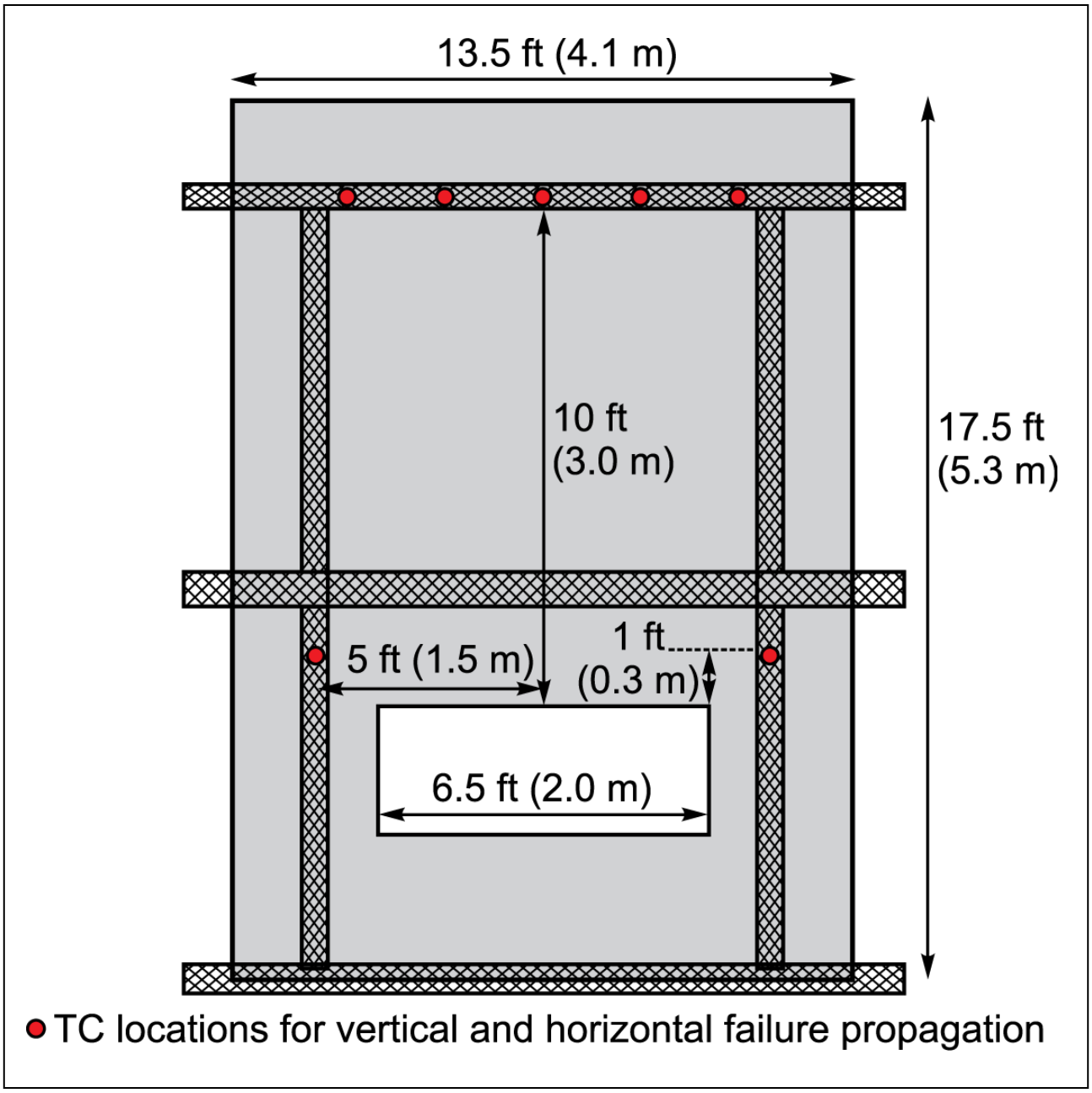

Fig. 3.5.6 Schematic of setup and dimensions in NFPA 285 (not to scale)

During the NFPA 285 test, the façade assembly is exposed to a progressively increasing fire exposure, with incident heat flux increasing from approximately 10 kW / m² to 40 kW / m² over the 30-minute test duration. The maximum heat flux level is reached only during the final five minutes of the exposure. Temperatures are monitored on the exterior wall surface, within any cavity spaces, and within the insulation system to evaluate fire propagation throughout the assembly.

Wall assembly acceptance is based on the performance criteria established in NFPA 285, which limit vertical and lateral fire propagation both on the exterior surface and within concealed spaces. The applicable pass / fail criteria are summarized below:

A. Exterior temperatures at 10 ft (3.0 m) height above the window and 5 ft (1.5 m) horizontally from the vertical centerline of the window shall be less than 1000 °F (538 °C).

B. Air cavity temperatures at 10 ft (3.0 m) height above the window and 5 ft (1.5 m) horizontally from the vertical centerline of the window shall be less than 1000 °F (538 °C).

©2019-2026 Factory Mutual Insurance Company. All rights reserved.

C. Insulation temperature at 10 ft (3.0 m) height above the window and 5 ft (1.5 m) horizontally from the vertical centerline of the window shall be less than 750 °F (399 °C).

D. Temperature in the second story room shall be less than 500 °F (260 °C).

Metal composite material (MCM) exterior wall assemblies are widely used in both new construction and renovation projects. These systems provide a modern architectural appearance while also supporting building energy performance through the incorporation of continuous insulation within the wall assembly. As a result, MCM façade systems offer both aesthetic and thermal efficiency benefits.

Although the use of MCM exterior wall assemblies continues to grow, it is important to recognize the limitations of existing fire test standards when assessing façade fire performance. The primary large-scale test methods currently used for exterior wall systems are NFPA 285, *Standard Fire Test Method for Evaluation of Fire Propagation Characteristics of Exterior Wall Assemblies Containing Combustible Components*, and BS 8414, *Fire Performance of External Cladding Systems*.While both tests provide valuable information on façade fire behavior, their fire exposures, test configurations, and performance criteria differ and should be understood in the context of the fire scenarios they are intended to represent.

NFPA 285 utilizes a two-story test apparatus to evaluate the fire propagation characteristics of exterior wall assemblies exposed to a window spill plume representative of a post-flashover compartment fire. During the 30-minute test, the incident heat flux to the façade gradually increases from approximately 10 kW / m² to 40 kW / m², with temperatures monitored on the exterior wall surface, within any cavity spaces, and within the insulation system.

Acceptance criteria limit temperature rise, vertical and lateral flame propagation, and fire spread within the assembly. Specifically, measured temperatures must remain below prescribed limits, vertical flame spread must not exceed 10 ft (3 m), and horizontal flame spread must not extend to the boundaries of the test apparatus.

NFPA 285 results has several limitations that include the relatively low heat flux exposure compared with modern post-flashover fire conditions, the absence of a corner-fire exposure, limited evaluation of cavity fire propagation, and the potential acceptance of non-tested material combinations through engineering or desktop assessments. These factors affect the test's ability to represent certain real-world façade fire scenarios.

Table 3.5.6 Fire Testing Limitations and Advantages (NFPA 285)

Fire Test	*Limitations*	*Advantages*
NFPA 285	- Lower heat flux exposure than other internationally recognized façade fire tests. - Lack of robustness despite being large-scale test and recognized in building codes. - Can be incorrectly applied in conjunction with third-party consultant (desktops) assessments to evaluate slight changes in the tested wall assembly components.	- Recognized in building codes.

3.5.7 Comparison of Key Façade Fire Tests

This section compares the features of the 16 ft PPT, BS 8414 test, and NFPA 285 test. Fig. 3.5.7-1 shows examples of the façade fire tests, and Table 3.5.7 compares key attributes for the three tests.

©2019-2026 Factory Mutual Insurance Company. All rights reserved.

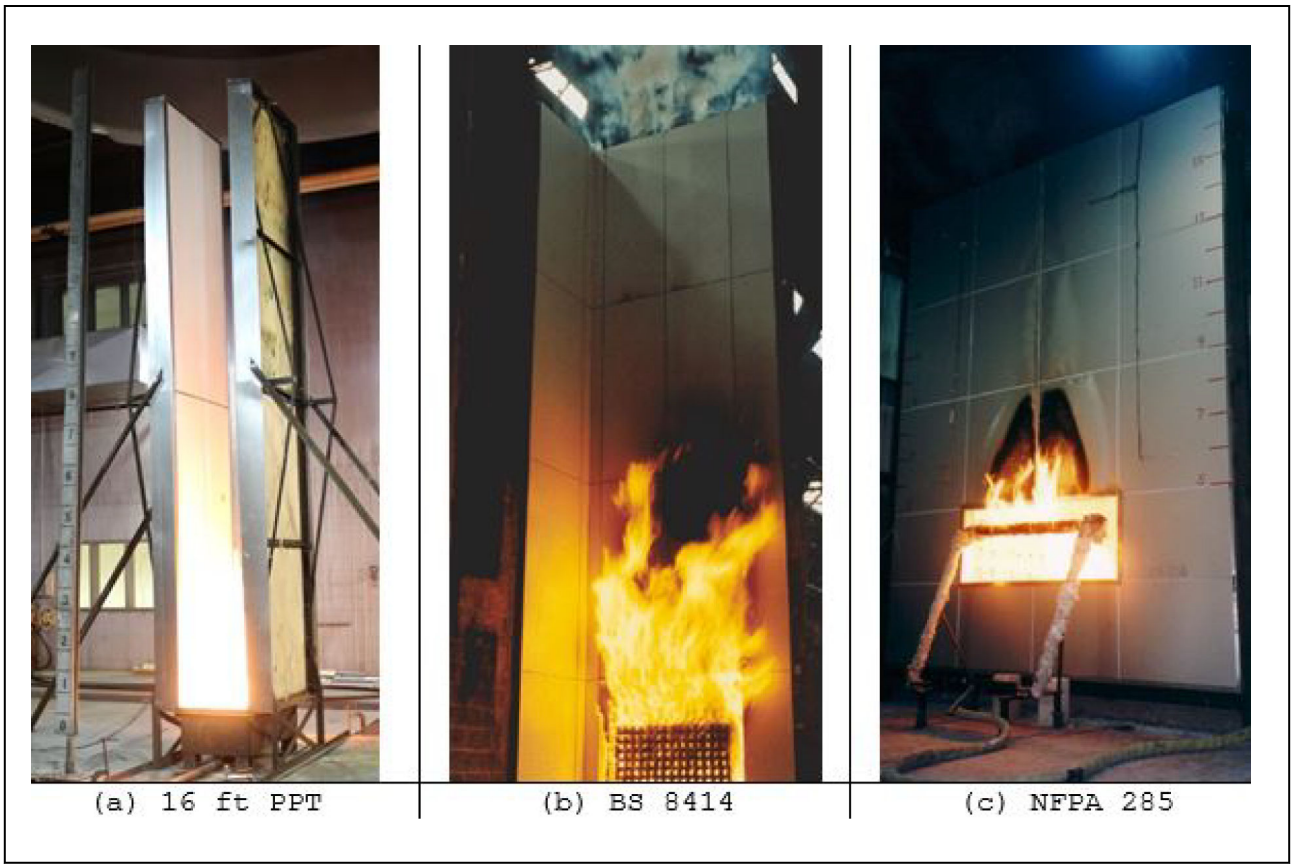

Fig. 3.5.7-1 Fire test examples

Table 3.5.7 Comparison of the Main Characteristics of Three Façade Fire Tests

Large-Scale Test	*Burner and HRR*	*Peak Heat Flux to Panels*	*Wall Height Above Window / Burner*	*Primary Criteria for Failure*
16 ft PPT	Propane burner: HRR = 360 kW	~100 kW / m^2	16 ft (4.9 m)	Peak HRR > 1100 kW
BS 8414	Wood crib: HRR = 3 ± 0.5 MW	~75 kW / m^2	20 ft (6.0 m)	Temperature at 16.4 ft (5 m) height rises 1110°F (600°C) above ambient
NFPA 285	2 Propane burners: HRR = 1.3 MW	40 kW / m^2	13 ft (4.0 m)	Temperature at 10 ft (3 m) height >1000°F (538°C)

Although the overall scale of the 16-ft Parallel Panel Test (PPT), NFPA 285, and BS 8414 is comparable, the fire exposures are significantly different. The 16-ft PPT subjects the test assembly to a substantially higher peak heat flux than NFPA 285 and more closely aligns with the heat flux levels generated in BS 8414.

Published research has shown that incident heat fluxes on the order of 100 kW / m^2 are representative of post-flashover compartment fires and severe exterior fire exposures. As a result, the 16-ft PPT may provide a more realistic assessment of façade fire performance under these conditions than test methods employing lower heat flux exposures.

Figure 3.5.7-2 compares the peak heat flux from ignition sources in various large-scale exterior wall fire tests.

©2019-2026 Factory Mutual Insurance Company. All rights reserved.

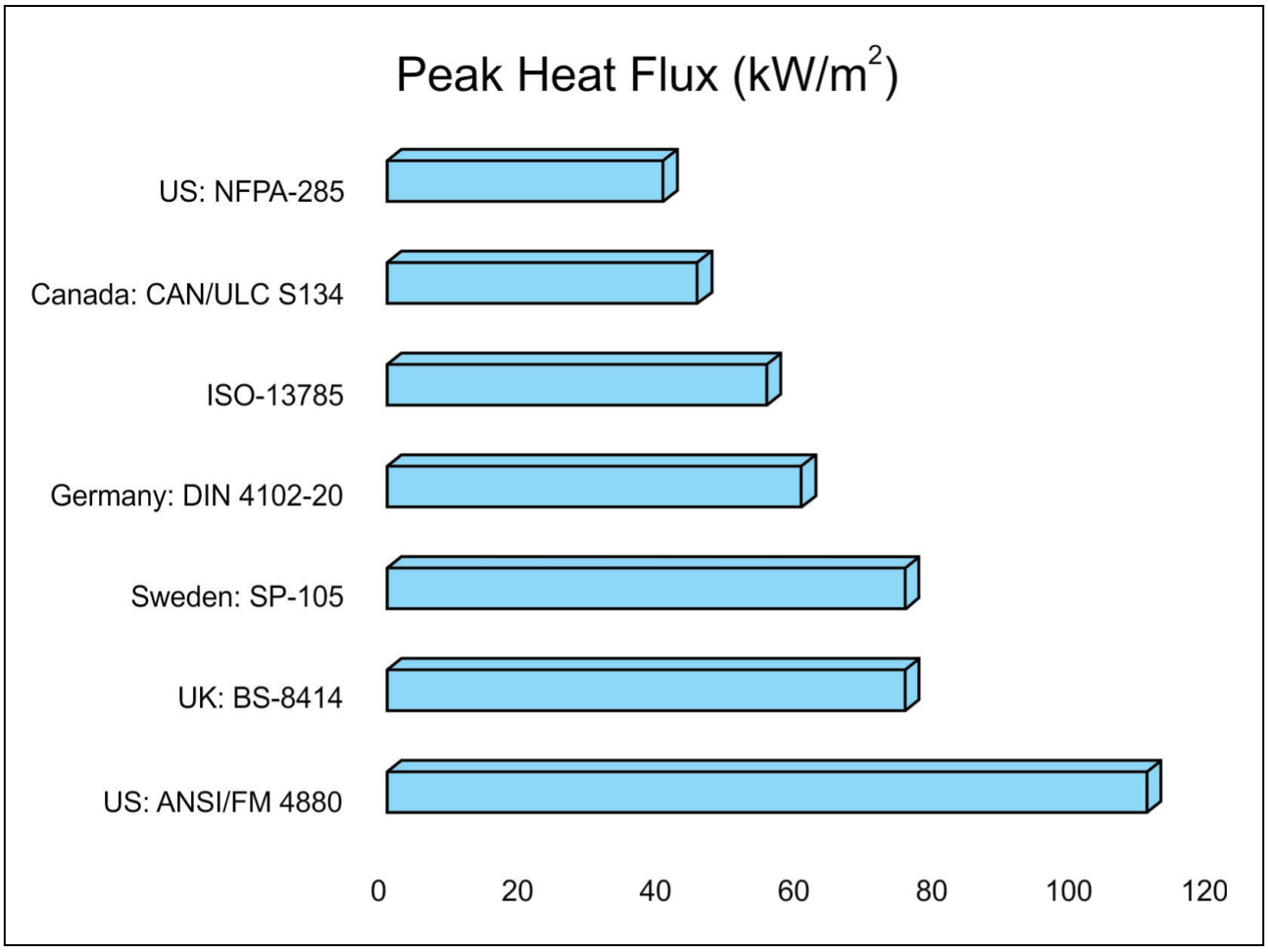

Fig. 3.5.7-2. Comparison of peak heat flux from ignition source in various exterior-wall large-scale fire tests

3.5.8 ASTM E84, Standard Test Method for Surface Burning Characteristics of Building Materials

ASTM E84, the tunnel test, is a widely used method for assessing the surface burning characteristics of building materials. In this test, a material specimen is exposed to a controlled gas flame under prescribed fuel and airflow conditions. The test does not include pass / fail criteria; instead, it provides comparative flame spread and smoke development indices, benchmarked against inorganic reinforced cement board (0) and red oak (100). Flame spread is observed through viewing windows along the test apparatus. Materials that do not support self-propagating fire within the test chamber are generally considered acceptable, and building codes classify products as Class A, B, or C based on the results.

ASTM E84 is a comparative fire test and should not be regarded as a representative assessment of actual fire performance. The standard is intended to compare the relative surface burning characteristics of materials under controlled test conditions and does not evaluate fire behavior under realistic fire scenarios. ASTM E84 explicitly states that the results describe material response to the test exposure only and do not address all factors necessary to assess fire hazard, fire risk, or performance under actual fire conditions.

A key limitation of ASTM E84 is its inability to evaluate fire behavior at wall–ceiling intersections. For combustible assemblies, particularly those containing plastics, the combined effects of re-entrant corner geometry and reflected heat flux can result in substantially greater flame spread and fire growth than indicated by the test.

ASTM E84 is a comparative test that evaluates the surface burning characteristics of materials under controlled conditions. A minimum of a 20-in. × 24-ft (0.51-m × 7.3 m) specimen is mounted to the ceiling of the test tunnel and exposed to a calibrated gas burner and airflow. The primary outputs are the Flame Spread Index (FSI) and Smoke Developed Index (SDI), which are determined relative to benchmark materials.

A material is considered to have successfully completed the test if flame spread does not reach the end of the 25-ft (7.6-m) tunnel during the 10-minute exposure. The resulting FSI is derived by comparing the flame spread area to reference materials; however, the calculated index is not directly proportional to actual fire growth or flame propagation.

©2019-2026 Factory Mutual Insurance Company. All rights reserved.

The test has significant limitations when applied to combustible construction materials, particularly plastics. Materials that soften, melt, drip, shrink, or delaminate can interrupt flame continuity and produce artificially low, and potentially misleading, FSI values. In addition, the horizontal test configuration does not represent the vertical or corner geometries commonly encountered in building applications, where fire propagation can be substantially more severe.

Although ASTM E84 remains widely referenced in building codes for interior finish classification, it should be viewed as a comparative screening tool rather than a representative measure of real-world fire performance. For these reasons, FM considers ASTM E84 to be inadequate as a standalone method for evaluating flame spread and fire hazard potential of construction materials.

FM considers ASTM E84 to be an inadequate method for evaluating flame spread for the following reasons:

- It is a comparative test, not representative of actual fire conditions.
- Melting or shrinking plastics can yield artificially favorable results.
- The test is conducted horizontally, whereas materials are often installed vertically.
- Fire propagation is further exacerbated at wall–ceiling interfaces, which are not adequately captured in the test.

Table 3.5.8 Fire Testing Limitations and Advantages (ASTM E84)

Fire Test	*Limitations*	*Advantages*
ASTM E84 (Steiner Tunnel Test, UL 723)	- Horizontal application is invalid for vertical installations. - Arbitrary flame spread rating; benchmarked to red oak, which is 100. - Misleading results for thermoplastic materials.	- Provides useful results for non-plastic interior finishes. - Test is intermediate-scale as opposed to small-scale.

4.0 REFERENCES

4.1 FM

Data Sheet 1-15, *Roof-Mounted Solar Photovoltaic Panels*

Data Sheet 1-17, *Reflective Wall and Ceiling Insulation*

Data Sheet 1-36, *Mass Engineered Timber*

Data Sheet 1-57, *Plastics in Construction*

FM 4411, *Examination Standard for Cavity Wall Systems*

FM 4431, *Examination Standard for Skylights*

FM 4470, Examination Standard for Single-Ply, Polymer-Modified Bitumen Sheet, Built-Up Roof (BUR) and Liquid Applied Roof Assemblies for use in Class 1 and Noncombustible Rood Deck Construction

FM 4476, Examination Standard for Flexible Photovoltaic Modules

FM 4478, Examination Standard for Roof-Mounted Rigid Photovoltaic Module Systems

FM 4483, Examination Standard for Building Integrated Photovoltaic Wall Mounted Systems

FM 4484, Examination Standard for Retrofit Coatings for Roof-Mounted Rigid Photovoltaic Module Systems

APPENDIX A GLOSSARY OF TERMS

FM Approved: Products and services that have satisfied the criteria for FM Approval. Refer to the Approval Guide, an online resource of FM Approvals for a complete listing of products and services that are FM Approved.

FM Non-Combustibility Test (part of FM 4880): Based on tests conducted by FM, to be considered a noncombustible material include meeting all three of the following tests and limits:

- The minimum ash content of the material per ASTM D482 test must be 90%.
- The maximum gross heat of combustion per ISO 1716 test must be less than 2kJ / g.
- Fire propagation apparatus (FPA) combustion test at 40% inlet O_2 atmosphere must not reveal any visible flaming for a 15-minute exposure at 50 kW / m^2 heat flux.

The FM requirements for non-combustibility of a material are specified in FM 4880, *Examination Standard for Class 1 Fire Rating of Building Panels or Interior Finish Materials*.

Heat flux: Thermal exposure experienced by test material (kW / m^2).

Heat release rate: Rate at which heat is released during a fire (kW).

©2019-2026 Factory Mutual Insurance Company. All rights reserved.

Intermediate-scale tests: Intermediate scale tests are generally designed to test assembled systems at a more cost-effective approach prior to a large scale test. These tests allow for an increased fire source and larger size over the small scale test. The intermediate test is designed to bridge the gap between small-scale and large-scale fire tests and to provide guidance for a large scale test. These tests use a larger heat release rate, to provide a more realistic source over that of small scale tests.

Large-scale tests: Large-scale fire tests are intended to replicate a credible fire scenario in a real-world representation of the materials being tested. This scenario is achieved through a combination of test configurations and realistic fire exposure. Examples include the tunnel test, 16 ft parallel panel test, 8 ft parallel panel test, FM corner tests and FM duct test.

Limited Combustible: A material that meets one of the following two conditions:

1. The material meets criteria a and either b or c below:

   a. The material, in the form in which it is used, exhibits a potential heat value not exceeding 3,500 Btu / lb (8141 kJ / kg) when tested in accordance with NFPA 259, *Standard Test Method for Potential Heat of Building Materials*; and

   b. The material shall have a structural base of noncombustible material. The surface coating should not exceed a thickness of 1 / 8 in (3.2 mm) where the surfacing exhibits a flame spread index not greater than 50 (e.g., gypsum board with a paper facing) when tested in accordance with ASTM E84, *Standard Test Method for Surface Burning Characteristics of Building Materials* or

   c. The composition of the materials in the form and thickness used exhibit neither a flame spread index greater than 25 nor evidence of continued progressive combustion when tested in accordance with ASTM E84. The composition of all surfaces exposed by cutting through the material on any plane exhibit neither a flame spread index greater than 25 nor evidence of continued progressive combustion when tested in accordance with ASTM E84.

2. Where tested in accordance with ASTM E2965, *Standard Test Method for Determination of Low Levels of Heat Release Rate for Materials and Products Using an Oxygen Consumption Calorimeter*, at an incident heat flux of 75 kW / m^2 for a 20-minute exposure, both the following conditions are satisfied:

   a. The peak heat release rate shall not exceed 150 kW / m^2 for longer than 10 seconds.

   b. The total heat released shall not exceed 8 MJ / m^2.

Noncombustible material (consensus approach) : A material that passes any one of the following conditions, plus the requirements of the FM non-combustibility test (which is part of FM 4880):

- The material, in the form used and under the conditions anticipated, will not ignite, burn, support combustion or release flammable vapors when subjected to fire or heat.
- The material is reported to have passed ASTM E136, *Standard Test Method for Assessing Combustibility of Materials Using a Vertical Tube Furnace at 750°C.*
- The material is reported to comply with the pass / fail criteria of ASTM E136, *Standard Test Method for Assessing Combustibility of Materials Using a Vertical Tube Furnace at 750°C.,* when tested in accordance with the test method and procedure in ASTM E2652, *Standard Test Method for Assessing Combustibility of Materials Using a Tube Furnace with a Cone-Shaped Airflow Stabilizer, at 750°C.*

Small-scale tests: Small scale tests are generally designed to test individual components, meant to be assembled at final installation. These tests are conducted at a bench-scale size, have a low or small heat release rate and the configuration is not representative of final installation. Many of these tests use a small flame source, such as a Bunsen burner, which does not represent a realistic fire. Small scale fire tests shouldn't be used to determine fire resistance in an installed real-world condition.

APPENDIX B DOCUMENT REVISION HISTORY

The purpose of this appendix is to capture the changes that were made to this document each time it was published. Please note that section numbers refer specifically to those in the version published on the date shown (i.e., the section numbers are not always the same from version to version).

October 2026. Interim revision. Significant changes include the following:

A. Reformatted the document, and added headings to help identify the testing regions.

B. Renamed the document, and clarified the scope to align with construction tests.

C. Added additional test information.

D. Added reference tables on small, intermediate and large-scale fire tests.

©2019-2026 Factory Mutual Insurance Company. All rights reserved.

April 2019. The scope of this document was clarified, and new information was added on NFPA 285 and BS 8414 exterior wall system fire tests.

January 2012. The document has been expanded to describe additional fire tests normally encountered in the evaluation of building materials.

January 2000. The document has been reorganized to provide a consistent format.

May 1998. Editorial changes were made.

February 1981. First publication of this document.

©2019-2026 Factory Mutual Insurance Company. All rights reserved.