REFORMER AND CRACKING FURNACES

Table of Contents

Page

1.0 SCOPE 3
1.1 Changes 3
2.0 LOSS PREVENTION RECOMMENDATIONS 3
2.1 Construction and Location 3
2.2 Protection 3
2.3 Equipment and Processes 3
2.4 Operation and Maintenance 5
2.5 Training 7
2.6 Human Factor 7
2.7 Contingency Planning 7
2.7.1 Equipment Contingency Planning 7
2.7.2 Sparing 7
2.7.3 Emergency response plans 8
3.0 SUPPORT FOR RECOMMENDATIONS 8
3.1 Loss History 8
3.2 Illustrative Losses 9
3.2.1 Primary Reformer 9
3.2.2 Ethylene Cracking Furnace 12
3.3 Routine Spares 12
4.0 REFERENCES 12
4.1 FM 12
4.2 Other 13
APPENDIX A GLOSSARY OF TERMS 13
APPENDIX B DOCUMENT REVISION HISTORY 13
APPENDIX C TECHNICAL SUPPORT 14
C.1 Furnace Tube and Header Materials 14
C.2 Reformer Catalysts 16
C.3 Furnace Design 17
C.4 Primary Reformer and Cracking Furnace Good Practices 17
C.4.1 Equipment and Processes 19
C.4.2 Operation and Maintenance 19
C.5 Description of Primary Reformer 21
C.6 Description of Cracking Furnace 24
C.7 Metal Dusting 28

List of Figures

Fig. 1. Reformer tube rupture accident (source: based on Baer and Henson, Ammonia Plant Safety, 1991) . 11
Fig. 2. Typical temperature profiles for a top-fired reformer 14
Fig. 3. Terrace wall furnace 18
Fig. 4. Radiant wall burner furnace 18
Fig. 5. Roof fired furnace 19
Fig. 6. Terrace wall primary reformer in modern ammonia synthesis facility (Foster Wheeler Energy Corp.) . 21
Fig. 7. Reformer & auxiliary boiler schematic 22
Fig. 8. Primary reformer furnace schematic 22
Fig. 9. Typical burner and catalyst tube arrangements 23

©2006-2022 Factory Mutual Insurance Company. All rights reserved. No part of this document may be reproduced, stored in a retrieval system, or transmitted, in whole or in part, in any form or by any means, electronic, mechanical, photocopying, recording, or otherwise, without written permission of Factory Mutual Insurance Company.

Fig. 10. Bottom manifold construction 24
Fig. 11. Schematic of typical reformer tube completely supported from the upper end 25
Fig. 12. Spring support assembly for reformer tubes 26

List of Tables

Table 1. FM Reported Loss Experience with Primary Reformers and Cracking Furnaces in North America, 1974–2010 by Peril 8
Table 2. FM Reported Loss Experience with Primary Reformers and Cracking Furnaces in North America, 1974–2010 by Damaged Part 8
Table 3. FM Reported Loss Experience with Primary Reformers and Cracking Furnaces in North America, 1974–2010 by Type of Failure 9
Table 4. Common Alloying Elements in High Temperature Reforming and Cracking Furnace Tubes 15
Table 5. Nominal Composition of Common Reformer Tube Alloys 16

©2006-2022 Factory Mutual Insurance Company. All rights reserved.

1.0 SCOPE

This data sheet provides recommendations and support for preventing losses to primary reformers in ammonia, methanol, and hydrogen plants, and cracking furnaces used in olefin plants for the production of ethylene and propylene.

1.1 Changes

January 2022. Interim revision. Minor editorial changes were made.

2.0 LOSS PREVENTION RECOMMENDATIONS

2.1 Construction and Location

2.1.1 Perform a hydrostatic test of all furnace tubes at the pressure recommended in API 510, Pressure Vessel Inspection, prior to shipment from the fabrication facility. Complete all shop welding, to the extent practical, prior to conducting hydro. Perform nondestructive examination on all post-hydro welds to identify any weld and base material defects.

2.1.2 Maintain water-tight construction of furnace casing and roof. Natural or service water incursion can thermally shock furnace tubes, causing tube failure.

2.2 Protection

2.2.1 Provide a manual shutoff valve in the main fuel gas supply line(s) to the furnace and other auxiliary system burners that is remotely located from the unit and has safe access for shutoff during emergencies. Remote operation of this valve is acceptable, provided local manual operation is also maintained.

2.2.2 Apply fireproofing to furnace support legs, preferably with a two-hour rating, unless it is determined that loss of two or three legs from a jet fire would not cause significant structural damage to the furnace.

2.2.3 Protect control rooms, rack rooms, and motor control centers (MCCs) in accordance with DS 5-32, *Data Centers and Related Facilities*, and DS 5-31, *Cables and Bus Bars*.

2.3 Equipment and Processes

2.3.1 Provide alarms for all process variables that could cause a trip of the furnace or downstream equipment. Set alarms sufficiently below the trip points to provide the operator opportunity to correct conditions prior to an automatic trip.

2.3.2 Design the interlock system with redundancy and reliability to minimize unnecessary or nuisance trips. Design controls and instruments regulating flows and monitoring critical parameters, such as reaction temperatures and pressures, to provide safe and reliable handling of situations arising during feed flow, steam, air, and/or electric power failures.

2.3.3 When a safety interlock or operator initiates a furnace trip, design the safety shutdown system to perform the following functions:

A. Trip all fuel firing in the furnace system including all auxiliary and startup burners.

B. Trip process air (heated in the convection section of the primary reformer and used in the secondary reformer) and open emergency steam supply to the process air coils in the primary reformer.

C. Trip process gas.

D. Maintain an adequate steam flow through the furnace tubes to prevent overheating of tubes and/or catalyst.

2.3.4 Alarm and Trip Interlocks

2.3.4.1 Initiate an alarm in the event of the following:

A. Low operating pressure at inlet to the furnace tubes

B. Loss of boiler water circulation, if a circulation pump is used.

C. Loss of boiler feedwater supply

©2006-2022 Factory Mutual Insurance Company. All rights reserved.

2.3.4.2 Initiate an alarm, and automatic furnace trip where appropriate, in the event of the following:

A. Inadequate process steam flow

B. Loss of process gas

C. High temperature of process stream leaving furnace (tunnel temperature)

D. Loss of ID fan

E. Low furnace pressure

F. Loss of FD fan (for balanced draft units)

G. High furnace pressure (for balanced draft units)

H. Low steam to process gas ratio (also called the steam-to-carbon or steam hydrocarbon ratio)

I. High bridgewall temperature and/or high stack temperature

J. Low-low-steam drum level

K. Low fuel gas pressure

L. High fuel gas pressure

M. Operator initiated emergency stop (E-stop button)

N. Loss of air flow to secondary reformer

O. Auxiliary boiler flame-out (Kellogg plants). Trip unless alternate steam sources are available or steam source is at a high enough pressure to permit a controlled shutdown as pressure reduces.

P. Where steam from the condensate stripper is used in the primary reformer, provide a high-level alarm and trip on high-high-level in the condensate stripper.

Q. Other conditions identified in a process safety systems analysis

2.3.5 Prevent overfiring and furnace tube damage during startup by doing the following:

A. Establishing the required low-firing rate in the furnace prior to admitting steam to prevent condensation. Condensation can result in catalyst breakage due to thermal shock and cause an increase in pressure drop. This affects operating performance and tube temperatures.

B. Limiting bridgewall temperature to a procedure-defined value prior to introducing steam. Provide an interlock to trip the furnace if this temperature is exceeded.

C. Limiting bridgewall temperature to 1000°F (540°C), or a value defined by the furnace designer, when steam only is passing through the furnace tubes. Provide an interlock to trip the furnace if this temperature is exceeded.

D. Having an operator exclusively assigned during startup to continually monitor furnace tubes using inspection ports.

2.3.6 To prevent fuel gas explosions during the introduction of fuel gas (such as during startup, when lighting additional burners, and when increasing firing rate), do the following:

A. Provide burner combustion safety controls for all burners that include purge timer, proof of combustion air flow, and pilot and main gas high and low fuel gas pressure interlocks.

B. Provide a pressure-checking system to ensure all burners are closed prior to initiating light-off.

A pressure checking system confirms all burner valves are tightly closed by allowing gas to bypass the main header supply safety shutoff valve by means of a bypass safety shutoff valve before startup and fill the piping between the main safety shutoff valve and the burner valves. If all burner valves are closed, pressure builds up within a defined amount of time, satisfying the bypass pressure switch. The bypass safety shutoff valve closes and the pre-ignition purge timer can be started. If the pressure remains above a defined minimum during the purge period, the burner valves are considered to be operationally leak-tight, a purge complete signal is generated, and provided all other purge permissives are also met, burner ignition can be started.

©2006-2022 Factory Mutual Insurance Company. All rights reserved.

C. For convection area startup burners and other auxiliary system burners, provide flame scanners, safety shutoff valves, and a combustion safety system. The combustion safety system provides burner interlocks to ensure safe conditions exist at the time of light-off, ensures correct sequences are followed when conducting light-off, and causes a burner trip should loss of flame will be detected during operation. (Refer to Loss Prevention Data Sheet, 6-10, *Process Furnaces.)*

D. Provide two SSOVs in series on the main and pilot fuel gas supplies with at least one of each set of two valves having proof of closure. A vent between each set of two valves is optional. The downstream SSOV may be either in the main gas supply line or in the branch line to each row of burners, depending on furnace design and operating modes. Provide a means for testing the tightness of each valve. Refer to Data Sheet 6-0, *Elements of Industrial Heating Equipment,* for leak tightness recommendations.

E. Use FM Approved components when available for the intended service.

2.3.7 To prevent overheating during normal operation, provide automatic temperature control that regulates fuel gas flow to the main burners.

2.3.8 To prevent fuel gas in-leakage during shutdowns do the following:

A. Provide manual isolation valves as needed to permit testing and maintenance of the burner trains.

B. Visually inspect burners to confirm no flame is present following a shutdown.

2.3.9 Where there is the potential for a sudden and significant change in the BTU content of the fuel, provide a controller to automatically adjust the fuel gas flow rate to compensate for higher or lower BTU content.

2.3.10 Take all practical measures to ensure a continuous supply of boiler feedwater, including but not limited to the following:

A. Redundant boiler feedwater pumps with automatic startup of the spare redundant pumps

B. A sufficient water reserve in the steam drum or other supply tank to provide for an orderly shutdown of the plant

C. A combination of steam turbine-driven and electric motor-driven feedwater pumps to ensure operation if the electrical power or steam supply fails

2.4 Operation and Maintenance

Establish and implement a reformer and cracking furnace equipment inspection, testing, and maintenance program. See Data Sheet 9-0, *Asset Integrity*, for guidance on developing an asset integrity program.

2.4.1 Nondestructively examine (NDE) critical pressure parts at each plant turnaround or as required based on operating experience and prior documented examination results.

Include the following components in the NDE program:

A. Pigtails and header connections

B. Dissimilar metal weld joints at tube material transitions

C. Steam pressure parts

D. Associated system feedwater piping for flow accelerated corrosion (FAC)

E. Areas subject to metal dusting

F. Outlet header and transfer line to secondary reformer, quench exchanger, or other downstream process equipment

2.4.2 Inspect steam piping hangers, supports, and attachments.

2.4.3 Monitor furnace tube creep.

2.4.3.1 Replace furnace tubes where creep has reduced predicted life to less than either (a) twice the expected equivalent operating hours to the next planned inspection shutdown, or (b) the expected equivalent operating hours plus the equivalent operating hours for two additional years, whichever is less. Use equivalent hours to account for startups, shutdowns, and operating transients as part of the evaluation.

©2006-2022 Factory Mutual Insurance Company. All rights reserved.

Up to one complete set of replacement furnace tubes and pigtails should be procured in advance when it is known that, based on a fitness for service evaluation, the tubes in service are approaching end-of-life and require replacement at the next scheduled outage.

2.4.3.2 Refer to API 530, *Calculation of Heater Tube Thickness in Petroleum Refineries*, for information on tube thickness calculations. Refer to the OEM and industry standards for tube-creep/fitness-for-service evaluations. During maintenance shutdowns, inspect tubes for bulging, distortion, and overheating.

2.4.3.3 For furnace tube repairs or replacement, verify tube metallurgy and construction based on the furnace design, taking into consideration past repairs or replacement. Not all tubes may be of the same alloy. Furnace tubes typically consist of multiple segments and thicknesses and, either by design or otherwise, different alloys may be used within one tube. Different alloys have different expected operating lives. Document the location of the tubes in the furnace and set inspection schedules accordingly.

Perform NDE and positive material identification (PMI) on new and replacement tubes (including routine spares) prior to installation to obtain a baseline for future asset integrity evaluations and verify integrity and fitness for the intended service.

Maintain certified metallurgical documentation of all tubes (including routine spare tubes). Track utilization of different tube materials due to repairs/replacements. If tube life has been shorter than anticipated, use higher grade materials where possible. Evaluate tube material changes utilizing management of change (MOC) and process hazard analysis (PHA) as part of process safety.

2.4.4 Provide sufficient inspection ports in furnace walls to permit observation of all furnace tubes, including in the tunnel port area, and burner operation. This provision will allow operators to view tubes while the furnace is in operation, permitting the detection of overheating (both general and localized) and carbon formation.

2.4.5 Visually observe furnace tubes at least once per 8-hour shift during normal operation. In addition, monitor furnance tube temperature and use infrared cameras at least weekly to scan for flame emanating from furnace tube cracks. Conduct spot checks as needed when visual observations indicate possible abnormalities.

2.4.6 Conduct optical pyrometer or infrared surveys of pigtails, tube supports, headers, manifolds, and transfer lines at least quarterly. For furnace designs with furnace tube outlet pigtails, thermocouples can be used on the outlet headers to provide continuous temperature monitoring. A key area to monitor is at the ligaments between pigtail connections on the outlet header.

2.4.7 Use fitness for service methodology to document and/or repair any defects.

2.4.8 Monitor and maintain feedwater treatment.

2.4.9 Perform online maintenance of the control and safety system using only qualified maintenance personnel and established, documented procedures. Refer to Data Sheet 7-45, *Safety Controls, Alarms and Interlocks (SCAI)*, for additional guidance.

2.4.10 Perform monitoring and inspection, testing, and maintenance of fans and drives. See DS 13-24, *Fans and Blowers*, DS 13-3, *Steam Turbines*, and DS 5-17, *Motors and Adjustable Speed Drives* for additional guidance.

2.4.11 When possible, purge process gas prior to shutting down the primary reformer. The burner flames, along with the flow of air and gas through the reformer, will reduce the potential for explosive accumulations to develop as the result of cracks in tubes or other internal furnace piping that allows process gas to enter the furnace.

2.4.12 Provide infrared monitoring of the furnace exterior and other refractory-lined piping and ducts. Perform monitoring following return-to-service after each planned or unplanned shutdown, and quarterly when the furnace is in operation.

2.4.13 Do not purge process gas into a hot furnace during shutdowns.

2.4.14 Maintain up-to-date operating instructions for the unit that include, but are not limited to, cold startup, hot startup, operation, normal shutdown, emergency shutdown, and restart after an emergency shutdown.

2.4.15 Provide operating records and document all maintenance activities. Monitor and evaluate operating conditions including, but not limited to, the following:

©2006-2022 Factory Mutual Insurance Company. All rights reserved.

A. Number, type, and duration of cycles, including startup, shutdowns, and forced outages

B. Pressure/temperature changes

C. Catalyst factors, including charging method, shape, stability, and deactivation

Compare this information against normal facility operating conditions.

2.5 Training

2.5.1 Provide formal and on-the-job training for all new operators. Document test results.

2.5.2 Conduct and document refresher training for all operators and maintenance personnel. Include normal and emergency operating procedures in the training. See Data Sheet 7-43, *Process Safety* and Data Sheet 10-8, *Operators,* for guidance.

2.5.3 Provide contractor training as needed to ensure facility policies are followed.

2.6 Human Factor

Implement a process safety program in accordance with DS 7-43, *Process Safety*.

2.7 Contingency Planning

2.7.1 Equipment Contingency Planning

When a reformer or cracking furnace breakdown would result in an unplanned outage to site processes and systems considered key to the continuity of operations, develop and maintain a documented, viable reformer or cracking furnace equipment contingency plan per Data Sheet 9-0, *Asset Integrity*. See Appendix C of that data sheet for guidance on the process of developing and maintaining a viable equipment contingency plan. Also refer to sparing, rental, and redundant equipment mitigation strategy guidance in that data sheet.

In addition, include the following elements in the contingency planning process specific to reformers and cracking furnaces:

A. Repair organizations, critical vendors, suppliers, and original equipment manufacturers (OEMs) are verified.

B. Furnace retubing. Tube replacement options and lead times, considering furnace design and tube metallurgy based on operating parameters including the following.

1. Furnace design, considering the potential for multiple cracking furnaces and reformers on site of different design.

2. Inlet and outlet headers, pigtails, pre-heater, superheater and process gas convection section heat exchanger coils and u-bends for each design and metallurgy type

3. Furnace tube segments of different thicknesses.

C. Furnace tube catalyst

D. Furnace refractory

2.7.2 Sparing

Sparing can be a mitigation strategy to reduce the downtime caused by a reformer or cracking furnace breakdown depending on the type, compatibility, availability, fitness for the intended service, and viability of the sparing. For general sparing guidance, see Data Sheet 9-0, *Asset Integrity*.

2.7.2.1 Routine Spares

Routine reformer or cracking furnace tube spares are spares that are considered to be consumables. These spares are expected to be put into service under normal operating conditions over the course of the life of the furnace, but not reduce equipment downtime in the event of a breakdown. This can include sparing recommended by the original equipment manufacturer. See Section 3.3 for routine spare guidance.

©2006-2022 Factory Mutual Insurance Company. All rights reserved.

2.7.3 Emergency response plans

Based on failure modes developed through a process hazards analysis (PHA) or similar systematic evaluation, develop emergency response plans for addressing critical emergency situations.

2.7.3.1 Develop an emergency response plan for freeze protection to include the following:

A. Prevention and/or removal of moisture/condensate in instrumentation and control lines

B. Removal of water from all process steam and water lines and equipment during planned and unplanned shutdowns

C. An alternate means for providing essential heat if the natural gas supply is interruptible. Refer to DS 9-18/17-18, *Prevention of Freeze-Ups*.

2.7.4 Maintain and post emergency operating procedures for all anticipated operating scenarios.

2.7.5 Conduct periodic simulated emergency shutdown drills.

3.0 SUPPORT FOR RECOMMENDATIONS

3.1 Loss History

The following tables summarize FM reported loss experience with primary reformers and ethylene cracking furnaces in North America, 1974–2010.

Table 1. FM Reported Loss Experience with Primary Reformers and Cracking Furnaces in North America, 1974–2010 by Peril

Peril	*Percentage of Occurrences*	*Percentage of Gross Loss* Cost
Pressure failure	75	43
Burglary	1	1
Electrical	1	-
Explosion	6	14
Fire	8	40
Mechanical	7	1
Miscellaneous	1	-
Wind	1	1
Total	100	100

Table 2. FM Reported Loss Experience with Primary Reformers and Cracking Furnaces in North America, 1974–2010 by Damaged Part

Damaged part	*Percentage of Occurrences*	*Percentage of Gross Loss* Cost
Effluent piping	1	-
Header	5	12
Miscellaneous	8	1
Piping	7	-
Refractory	1	-
Shell plate	5	2
Steam piping	1	1
Steel header-	7	-
Superheater	2	-
Support	1	-
Tube	43	64
Tube sheet	1	1
Not recorded	18	19
Total	100	100

©2006-2022 Factory Mutual Insurance Company. All rights reserved.

Table 3. FM Reported Loss Experience with Primary Reformers and Cracking Furnaces in North America, 1974–2010 by Type of Failure

Kind of failure	*Percentage of Occurrences*	*Percentage of Gross Loss* Cost
Bulging	10	3
Change in Material Condition	1	3
Corrosion	1	2
Cracking	20	15
Miscellaneous	8	5
Over-temperature	2	10
Overheating	5	6
Rupture	7	31
Stress cracking	2	3
Tearing asunder	21	-
Not recorded	23	22
Total	100	100

3.2 Illustrative Losses

3.2.1 Primary Reformer

3.2.1.1 Transfer Line Failure — A 2 ft x 3.5 ft (0.6 m x 1.1 m) rupture occurred in the transfer line to secondary reformer and catalyst was blown out of the secondary reformer. The rupture was detected by a loss of pressure indication in the control room and operators cut off natural gas feed to the primary reformer. On restart following repairs, a 10 in. (250 mm) vertical crack was found on the inside radius of one 90° elbow. The transfer line was refractory-lined carbon steel pipe with a stainless steel inner liner, part of which had been replaced with chrome-nickel alloy without refractory or inner liner. The rupture was in the refractory-lined section and was the result of a failed weld repair.

3.2.1.2 During an emergency controlled shutdown of a reformer, insufficient unloading and cool-down time of the primary reformer caused decomposition of catalyst. This plugged tubes and resulted in them becoming overheated when the reformer was brought back on line.

3.2.1.3 Nine 4½ in. (114 mm) diameter catalyst tubes ruptured, and 26 were severely distorted due to dry firing. Cold weather resulted in control problems from condensate freezing, plus a crack was found in a steam supply valve. When the reformer was shut down, the fuel gas valve did not shut completely and when the steam and methane feed was isolated from the furnace, the tubes overheated (dry fired).

3.2.1.4 A 4 in. (100 mm) tube ruptured due to thinning by ‘‘creep stress’’ in the superheater section of the primary reformer.

3.2.1.5 A massive furnace tube failure occurred following a period of overheating. Tube failure was noticed at the next startup when excessive temperatures were measured in the flue gas. Welds were found to be faulty and thermal stresses from cooling and heating again at startup is believed to have caused cracking, which led to natural gas escaping and burning/overheating. Thermal stress was believed to be aggravated by failure to cut back on firing rate prior to the loss when a utility electric power interruption resulted in a 60% reduction in steam flow through the reformer.

3.2.1.6 A fuel-air explosion caused damage to a furnace shell, supporting structure, and insulation. Operating problems forced the normal controlled shutdown of the reformer. As part of the shutdown, nitrogen was used to purge the feed gas lines and reformer tubes. It is believed that this purge resulted in natural gas being admitted to the furnace through a cracked tube resulting in a gas-air explosion.

3.2.1.7 Rupture of process piping in a head house (penthouse) resulted in fire and considerable damage. A screw fitting used for installing bubbled alumina refractory was believed to be leaking slightly, which caused process pipe erosion/thinning and eventual failure.

3.2.1.8 Loss of instrument control of the gas feed subjected reformer tubes to heat damage and destruction. Improper maintenance work while reformer was in ‘‘hot idle’’ resulted in the isolation of the combustion controller air supply. Resulting zero pressure caused the firing valve to open wide and drive furnace to full fire.

©2006-2022 Factory Mutual Insurance Company. All rights reserved.

3.2.1.9 A fuel-gas explosion during light-off damaged an auxiliary boiler and primary reformer. The boiler was manually lit and an explosion occurred after 20 minutes of unsuccessful attempts to light a burner with a hand-held torch. Reformer damage caused by the vibration and force of the explosion was minor.

3.2.1.10 Operator error during a controlled shutdown resulted in overfiring of the burners and overheating of the penthouse. The unit was experiencing ID fan vibration problems and the fan had been shut down. A steam ring in the stack was used to induce a draft, but it is believed the draft was not adequate for the firing rate and resulted in hot gases entering the penthouse.

3.2.1.11 Catalyst was overheated and destroyed during startup when an improper steam-feed ratio existed. The steam flow indicator malfunctioned due to icing and indicated a higher steam flow than actual. Also, the indication did not change as the signal to reduce steam flow was sent. The low flow interlock received flow indication from same sensor and failed to initiate a trip. A separate flow indicator not tied into the control system was available but was not used by the operator.

3.2.1.12 Problems with a Gimpel trip valve to a steam turbine driving a syngas compressor caused a valve to trip. A cascading series of problems then occurred as the 500 psi (35 bar) steam system was starved of steam and operating upsets occurred with the final ‘‘blow’’ being rupture of the 1500 psi (103 bar) steam piping. The pipe ruptured as a result of excessive steam temperature from the superheater located in the convection section of the primary reformer. Although firing was reduced in the primary reformer, the reduction was not enough to prevent overheating from loss of natural gas feed and reduced steam flow. Due to damage that can be caused by thermal shock, there are no process interlocks with the reformer fuel supply.

3.2.1.13 The rupture of a pipe supplying steam to a primary reformer caused a facility shutdown. The facility was performing a controlled emergency shutdown at the time of the rupture because an operator had heard a leak during a walk-by. At the time of the rupture, all process feed had been isolated and steam generation was down to about 50%. Reformer tubes appeared to sustain no damage.

3.2.1.14 A primary reformer tripped as a result of a power outage and was bottled up to maintain heat. A package boiler used to provide cooling steam flow through furnace tubes tripped an hour and a half later and steam flow was lost. Upon restart, approximately three hours after the initial trip, a small number of tubes failed as the result of thermal shock when steam was reintroduced. This was not recognized by the operators and startup continued. The reduced flow of steam through the undamaged tubes caused all 168 tubes to overheat and fail. Downtime was limited to two months by having tubes shipped from many sources, including competitors; extra expense was incurred.

3.2.1.15 Operator error during startup resulted in severe overheating of primary reformer tubes and adjacent heat coil tubes. All 260 furnace tubes were destroyed.

3.2.1.16 An explosion occurred in the convection heat recovery section of the primary reformer during startup after a turnaround. The cause was not identified.

3.2.1.17 During normal operation at 100% capacity, a section of the primary reformer refractory-lined carbon steel outlet header ruptured and a sizable fire ensued. The fire largely self-extinguished after a process gas shutoff valve was manually closed.

Metallurgical analysis of the failed header determined the cause to be a 40 in. (100 cm) longitudinal ligament crack on the top of the header that initiated on the exterior as a result of high localized stress coupled with a somewhat higher than expected operating temperature. It is believed that small through-wall cracks/holes along this crack allowed process gas to escape, creating a small fire external to the header that led to short-term overheating and rupture. The resulting rapid depressurization damaged the primary reformer catalyst and caused reverse flow in the downstream equipment, damaging catalyst in the secondary reformer, high- and low-temperature shift reactors, and methanator.

Severe damage from the fire and depressurization occurred in the vicinity of the rupture to the header, furnace tubes, refractory, and casing. Production was interrupted for 72 days, part of which included a planned 45-day turnaround outage that was scheduled to begin three weeks after the incident.

3.2.1.18 A circuit breaker supplying power to the plant compressed air system tripped. Field operators responded by closing the process gas isolation valve to the primary reformer, but this was not communicated to control room operators and the primary reformer controls were left in automatic with burners in service. The loss of process gas supply caused the process gas control valve to go 100% open. Upon restoration of

©2006-2022 Factory Mutual Insurance Company. All rights reserved.

the plant compressed air system, the process gas isolation valve was re-opened and the sudden large in-rush of gas thermally shocked the overheated furnace tubes, causing several to rupture, resulting in a furnace fire.

Conditions were further aggravated when the ID fan tripped on overload trying to maintain furnace draft, which also tripped the FD fan. Loss of fans resulted in loss of cooling steam to the furnace tubes from the waste heat boiler located between the primary reformer convection section and stack. All 160 furnace tubes were overheated and required replacement, with lesser damage to the convection section, duct work, furnace refractory, and wall burners. The primary reformer was returned to service and production resumed 12 weeks after the incident.

3.2.1.19 Figure 1 shows the initiating event for a reported tube rupture in a two-tier terraced-wall primary reformer. The gate valve on the low pressure tap (circled) failed closed. Failure was due to caustic corrosion from carryover of boiler chemical feedwater treatment. As a result of the valve closing, the flow controller received an erroneous ‘‘high flow’’ reading and caused the steam flow control valve to shut, depriving all 208 catalyst tubes in one cell of the reformer of steam. Without steam, the endothermic reactions normally occurring in the furnace tubes stopped. Tube temperatures rose rapidly even though there was a response by operators to reduce fuel gas flow. Steam flow was re-established after about 25 minutes. About 15 minutes after steam flow was re-established, the fuel gas was shut off completely. During this excursion, a number of tubes ruptured and feed gas plus hydrogen escaped into the furnace and began to burn. A cluster of 14 tubes at one end of the furnace failed. The remaining tubes were examined but no additional tube damage was found.

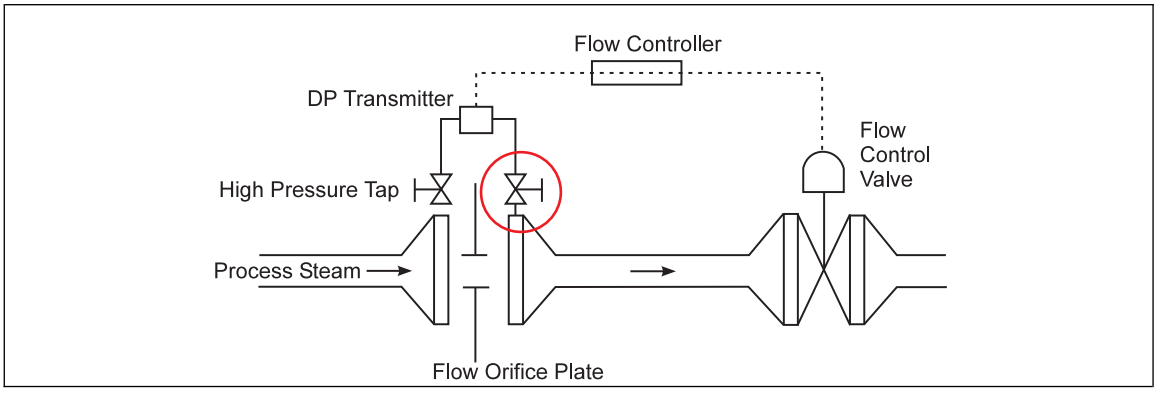


Fig. 1. Reformer tube rupture accident (source: based on Baer and Henson, Ammonia Plant Safety, 1991)

The damaged tubes were removed and the furnace was returned to service. Damaged tubes featured two failure modes–hoop stress overheating and blow-out from thermal shock when steam was re-injected into the furnace and fuel shutoff, causing some tubes to cool too rapidly. After the accident, the steam control valve was re-designed to prevent complete shut-off of the steam flow.

3.2.1.20 During a heavy thunderstorm, an external power failure occurred, resulting in a trip of the entire 1250 MTPD ammonia plant. During restart of the top-fired reformer, operator error occurred in the verification process of valve positions for the tunnel (8 total), superheater (12 total), and arch burners (180 total). The tunnel and superheater valves were verified closed, but the arch burner valves were not verified. The arch burner valves were known not to be tight. This allowed gas to continue to enter the reformer furnace through the unlighted arch burners. The reformer was not equipped with a positive-pressure checking system to ensure all burner valves were closed prior to light-off. The startup process continued, which included the startup of the auxiliary boiler. Approximately 35 seconds after the startup of the auxiliary boiler, a reformer explosion occurred, completely destroying the reformer, with extensive peripheral equipment damage. The blast pressure in the immediate vicinity has been estimated at approximately 2 psi (10 kPa), with some debris thrown more than 80 ft (25 m) from the furnace. The HAZOP after the event resulted in installation of a burner management system and identification of documentation, process and procedural improvements that included the P&IDs, manuals, records, and startup procedures.

©2006-2022 Factory Mutual Insurance Company. All rights reserved.

3.2.2 Ethylene Cracking Furnace

3.2.2.1 All five ethylene cracking furnaces at this facility tripped during operation as a result of an improperly set switch in the UPS system. Furnace and convection section tubes were subjected to rapid cooling, requiring replacement of furnace tubes in Units 4 and 5 and convection tubes in Unit 1, plus some refractory and ID fan, also on Unit 1. As a result of finding suitable tubing in warehouse inventories, TE on Units 4 and 5 was limited to one week, and to five weeks on Unit 1.

3.2.2.2 A combination of feedwater treatment excursions and a caustic valve malfunction over a period of about 15 months caused a buildup of deposits and under-deposit corrosion in the three transfer line exchangers (TLEs) at the outlets of each of five ethylene cracking furnaces and in two auxiliary boilers. All tubing in the TLEs required replacement or rebuilding.

3.2.2.3 A weld on the outlet of a cracking furnace broke open and released hydrocarbons into the furnace, resulting in a fire that damaged the furnace and quenching areas. All 48 tubes in the furnace required replacement and there was heat damage to the exterior piping in the quench area.

3.2.2.4 A rupture of furnace tubes in one of six cracking furnaces led to a fire in the furnace and depressurization of the downstream gasoline fractionator, which because of abnormally high liquid level, allowed reverse flow through the TLE and contributed to the severity of the fire. The fire penetrated the furnace casing and resulted in a spreading liquid pool fire, causing major fire and heat damage to that furnace and two adjacent furnaces. Damage to furnace components included the radiant coils, convections coils, refractory, burners, external piping and insulation, cables, instruments, foundations, support structures, and access platforms. Restoration of full production was complicated by other factors/events, but it is estimated that the TE from this event was 7-7½ months.

3.2.2.5 During restart after a trip (DCS failure), cracks were found in some radiant tubes of an ethylene cracking furnace. Half of the furnace burners had tripped due to a false indication that a low drum water level had occurred. The initial cracks were believed to be due to excessively rapid cooling during the trip. Additional cracking on restart were believed to have occurred as a result of carbonized tubes (metal dusting). An inadequate number of thermocouples to properly monitor tube temperatures was believed to be a contributing factor in the loss.

3.3 Routine Spares

Tubes are common routine spares for reformers and cracking furnaces to address minor tube repairs or replacement. Store and maintain routine spare tubes per original equipment manufacturer recommendations to maintain viability. Refer to Data Sheet 9-0, *Asset Integrity*, for additional guidance.

3.3.1 The number of routine spare tubes (and pigtails) may need to be increased if the furnace design is such that otherwise good tubes need to be removed in order to access and repair/replace failed or leaking tubes.

3.3.2 Routine spare tubes should be pre-tested, full-length furnace tubes. Perform NDE and positive material identification (PMI) on these tubes prior to installation to obtain a baseline for future fitness for service evaluations, and verify integrity and fitness for the intended service.

3.3.3 Where reformer furnace tubes consist of segments of different thickness, maintain an inventory of each wall thickness as part of the routine spares to permit on site fabrication.

4.0 REFERENCES

4.1 FM

Data Sheet 5-17, *Motors and Adjustable Speed Drives*
Data Sheet 5-31, *Cables and Bus Bars*
Data Sheet 5-32, *Electronic Data Processing Systems*
Data Sheet 6-10, *Process Furnaces*
Data Sheet 7-43, *Process Safety*
Data Sheet 7-45, *Safety Controls, Alarms and Interlocks (SCAI)*
Data Sheet 9-0, *Asset Integrity*
Data Sheet 9-18/17-18, *Prevention of Freeze-Ups*

©2006-2022 Factory Mutual Insurance Company. All rights reserved.

Data Sheet 10-8, *Operators*
Data Sheet 13-3, *Steam Turbines*
Data Sheet 13-24, *Fans and Blowers*

4.2 Other

American Petroleum Institute (API). *Pressure Vessel Inspection.* API 510.

American Petroleum Institute (API). *Calculation of Heater Tube Thickness in Petroleum Refineries.* API 530.

International Electrotechnical Commission (IEC). *Functional Safety of Electrical/Electronic/Programmable Electronic Safety-Related Systems.* IEC 61058.

International Society of Automation (ISA). *Application of Safety Instrumented Systems for the Process Industries.* ISA S-84.01.

APPENDIX A GLOSSARY OF TERMS

Bridgewall: Traditionally, a wall in the furnace over which the products of combustion flow as they leave the furnace section. In reformer and cracking furnaces, it is the outlet of the radiant furnace section.

Cracking furnace: A specially designed fired heater in which heated natural gas, or other hydrocarbon stream, mixed in a defined ratio with steam, is thermally cracked to produce ethylene (C_2H_4) or propylene (C_3H_6). These reactions are endothermic and heat must be added to maintain the process stream temperature in the tubes at or above the minimum required for the reactions to occur.

Ignitable Liquid: Any liquid or liquid mixture that is capable of fueling a fire, including flammable liquids, combustible liquids, inflammable liquids, or any other reference to a liquid that will burn. An ignitable liquid must have a fire point.

Metal dusting: A corrosion phenomenon which leads to the disintegration of structural alloys, turning them into dust composed of fine particles of the alloy and carbon. Metal dusting occurs at temperatures of 800°F to 1300°F (425°C to 700°C) with high carbon activity in the gas phase. These conditions are prevalent in many chemical and petrochemical processes. See also Appendix C.7

Pigtail: The piping used to connect the inlet manifold to individual furnace tubes. May also be used to connect the riser tubes to the outlet manifold. This pipe is often bent into an ‘‘S’’ configuration to provide the flexibility to withstand thermal expansion and contraction inherent in furnace operation.

Primary reformer: See *Reforming furnace*.

Reforming furnace: A specially designed fired heater in which heated natural gas mixed in a defined ratio with steam is reacted in the presence of a catalyst to create hydrogen (H_2), carbon dioxide (CO_2), and small quantities of carbon monoxide (CO). These reactions are endothermic and heat must be added to maintain the process stream temperature in the tubes at or above the minimum required for the reactions to occur.

APPENDIX B DOCUMENT REVISION HISTORY

The purpose of this appendix is to capture the changes that were made to this document each time it was published. Please note that section numbers refer specifically to those in the version published on the date shown (i.e., the section numbers are not always the same from version to version).

January 2022. Interim revision. Minor editorial changes were made.

January 2021. Interim revision. Minor editorial changes were made.

July 2020. Interim revision. Updated contingency planning and sparing guidance.

October 2012. Major changes include the following:

A. Updated recommendations that address protection, actions to take on a furnace trip, conditions initiating a furnace trip, startup cautions, preventing fuel gas explosions, NDE and monitoring guidance, training, and contingency planning.

B. Updated loss history and loss examples to include primary reformer and cracking furnace losses occurring during the period 1974-2010.

C. Added additional information to Appendix C.6, Description of Cracking Furnace.

©2006-2022 Factory Mutual Insurance Company. All rights reserved.

D. Made editorial changes.

January 2012. Terminology related to ignitable liquids has been revised to provide increased clarity and consistency with regard to FM Global's loss prevention recommendations for ignitable liquid hazards.

February 2006. This revision is a major rewrite. The recommendation section has undergone substantial change to focus on those recommendations that drive FM Global and industry loss experience and have been expanded to address steam-hydrocarbon cracking furnaces in addition to catalytic reforming furnaces.

The title of the data sheet has been changed from "Catalytic Steam-Hydrocarbon Reformers" to "Reformer and Cracking Furnaces." Dual-numbering (7-72/12-10) has been discontinued.

January 2000. The document was reorganized to provide a consistent format.

October 1981. Initial publication.

APPENDIX C TECHNICAL SUPPORT

C.1 Furnace Tube and Header **Materials**

Operating temperature has a major influence on tube deformation. Below temperatures of approximately one third of the material melting point, deformation is dependent only on the applied stresses. At higher temperatures, this instantaneous stress induced deformation is coupled with creep, a slow continuous deformation involving both dislocation movement and grain boundary sliding.

Reforming and cracking furnaces must operate continuously at very high temperatures for long periods of time (See Figure 2). Typically, a reforming furnace with an expected tube life of 12 years will operate with tube temperatures of 1650°F to 1760°F (900°C to 960°C) and a cracking furnace with an expected tube life of seven years will operate with tube temperatures in the range of 1920°F to 2050°F (1050°C to 1120°C). High creep strength is, therefore, essential.

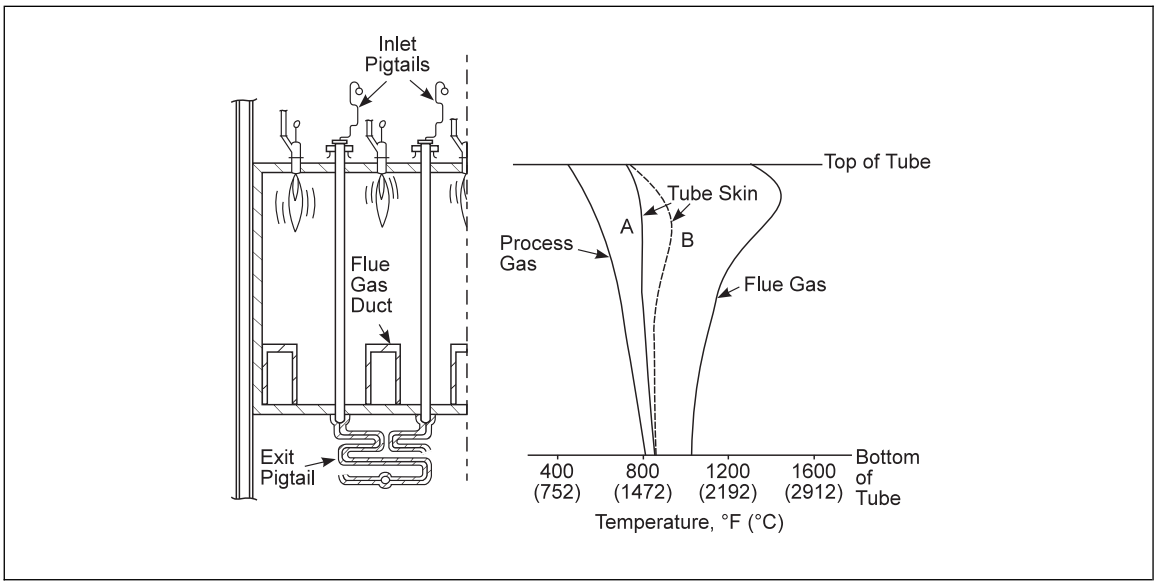


Fig. 2. Typical temperature profiles for a top-fired reformer

Furnace tubes must also meet other criteria. They need to be corrosion resistant as they operate in a highly corrosive environment; the tube ID sees a gas mixture of steam, hydrocarbons, and carbon monoxide, while the OD is subject to hot flue gas containing nitrogen and oxygen. They are subject to thermal cycling and, in order to minimize thermal fatigue, they should have a low coefficient of thermal expansion. And, since a number of pieces and components must be joined together to produce a final assembly, the tube materials must be weldable.

No material has all of the desired properties, and efforts continue for finding the best material that most closely satisfies these metallurgical requirements at an economically reasonable cost.

©2006-2022 Factory Mutual Insurance Company. All rights reserved.

All tubes in this service are centrifugally cast at high temperature to achieve a coarse grain boundary and have an iron-nickel-chromium base, with other alloys added to achieve best results. The course grain boundary coupled with fine carbide precipitates restricts dislocation movement that manifests itself as creep. However, as a consequence, at room temperature the tubes are brittle and exhibit low ductility.

Table 4. Common Alloying Elements in High Temperature Reforming and Cracking Furnace Tubes

Element	Description
Iron	Base element. Minimizes the need for nickel. Aids in carbide formation.
Nickel	Gives a stable austenitic structure, providing hot alloy strength with good ductility. Resists carburization and provides reduced corrosion rates in high temperature oxidizing atmospheres. High nickel alloys have relatively low coefficients of thermal expansion.
Chromium	Provides resistance to high temperature oxidation and carburization and increases high temperature strength.
Carbon	The most important element for controlling hot strength and creep resistance. Carbon is also the source of carburization, which reduces the structural integrity of the tubes.
Silicon	At less than 2 concentration enhances oxidation and carburization resistance. At levels greater than 2, material hot strength is reduced.
Niobium	Forms eutectic carbides that improve creep strength by restricting grain boundary dislocation.
Titanium	Added in small amounts to stabilize secondary carbides, the main contributors to creep strength. A microalloy.
Zirconium	Another microalloy; used to further improve carbide stability and creep strength.

Centrifugal casting involves pouring molten metal (heated and mixed with precise alloying amounts in an electric induction furnace) into a rotating mold. Solidification occurs from the outside with the rate controlled by the thickness and type of refractory used to construct the mold. After solidification, the tube is removed from the mold and allowed to cool. Residual refractory on the OD is removed by stainless steel shot blasting, and porous cast material on the ID is removed by deep hole boring. Practical limits to centrifugal casting restrict the length of tube segments to 18 to 20 ft (5.5 to 6 m) for reformer furnace tubes and to 11 to 13 ft (3.5 to 4 m) for the smaller diameter tubes used in cracking furnaces. Specialized and carefully controlled welding techniques are required to join these segments into completed tube assemblies.

Creep strength decreases with increasing operating temperature and creep is irreversible. Therefore, high temperature excursions from overfiring at startup, or loss of either process steam or process gas, will significantly reduce the operating life of the tubes. Excessive creep can also occur as a result of tube bending (if tube thermal expansion is restricted; a typical reformer tube will grow 6 in. (150 mm) when heated from ambient to operating temperature) and excessive tensioning (sometimes applied by operators to correct tube bending problems).

©2006-2022 Factory Mutual Insurance Company. All rights reserved.

Table 5. Nominal Composition of Common Reformer Tube Alloys

Alloy	*Composition (min/max) – Weight, (Balance Fe)*									
	C	Si	Mn	Cr	Ni	Nb	W	Mo	Other	Max. Temp.
HK 40	.4			25	20					1832°F (1000°C)
IN 519	.3			24	24	1				
HP Nb Mod.	.4			25	35	1				
IN 519 TZ	.3			24	24	1				
Kubota Reformer Furnace Tube Alloys										
KHR20T	.35/.50	0/1.5	0/2.0	23/27	19/25	0/.5			add.	
KHR24C	.25/.35	0/1.0	0/1.5	23/26	23/26	1.0/2.0		0/.5		
KHR35C	.4/.5	0/1.5	0/1.5	24/28	34/37	.6/1.5				
KHR35CT	.45/.55	0/1.5	0/2.0	24/27	33/37	0/1.0			add.	
Kubota Cracking Furnace Tube Alloys										
KHR35C HiSi	.4/.5	1.5/2.0	0/1.5	24/28	34/37	.6/1.5				
KHR35CT HiSi	.45/.55	1.5/2.0	0/2.0	24/27	33/37	0/1.0			add.	
KHR35CW	.4/.5	1.5/2.0	0/1.5	24/28	34/37	1.1/1.7	.5/1.5	.3/.8		
KHR35H HiSi	.37/.47	1.5/2.0	0/1.5	24/28	34/37			1/1.5		
KHR35W	.4/.5	0/2.0	0/2.0	24/28	34/37		3/4.5			
KHR45A	.4/.6	0/2.0	0/2.0	30/35	40/46				add.	
KHR48N HiSi	.4/.6	1/1.5	0/0.8	25/30	44/50		4/ 6			
Le Manoir (Pompey) Reformer Furnace Tube Alloys										
A 698 HK 40	.35/.45	.5/2.0	0/1.5	23/27	19/22				add.	1832°F (1000°C)
A 297 HP	.35/.75	0/2.5	0/2.0	24/28	33/37				add.	
Manaurite 36X	.35/.45	0/1.5	0/1.5	23/27	32/35	0/1.5			add.	1922°F (1050°C)
Manaurite XM	.40/.45	0/2.0	0/1.5	23/27	32/35	0/1.5			add.	2012°F (1100°C)
Manaurite XT	.40/.45	0/1.5	0/1.5	35/37	43/48	0/1.5			add.	2138°F (1170°C)
Manaurite XTM	.40/ .45	0/ 1.5	0/ 1.5	35/ 37	43/48	0/1.5	0/2.0		add.	2192°F (1200°C)

Outlet pigtails, outlet manifolds, and transfer lines from the furnace, including those that are refractory lined and fabricated with carbon steel, also operate at high temperatures and are similarly subject to creep and carburization.

C.2 Reformer Catalysts

Good reformer catalysts have the following characteristics:

- Size, shape, chemical composition and surface area to achieve the desired conversion of process gas at the lowest possible tube wall temperature and pressure drop
- Minimal breaking or decomposition that would lead to catalyst settling and voids
- No carbon formation during the reforming process
- A lifetime at least equal to the plant turnaround cycle
- Capable of withstanding normal startup and shutdown transients
- Can be regenerated *in situ* (without removal from the furnace tubes) in the event of accidental poisoning (sulfur in process gas) or carbon deposition

The active component in primary reformer catalysts is metallic nickel, which is finely dispersed over the catalyst support material. The common support materials are α-alumina, calcium aluminate, and magnesium aluminate. The use of α-alumina is predominant in North America and is being increasingly used worldwide.

©2006-2022 Factory Mutual Insurance Company. All rights reserved.

Calcium aluminate is also widely used outside of North America because its natural alkalinity suppresses carbon formation. Magnesium aluminate is used primarily by one manufacturer and is therefore less common.

Because of the highly endothermic reactions occurring in the reformer tubes, good heat transfer is essential to achieving the desired conversion. Catalyst materials are poor conductors and, therefore, catalyst size and geometry is an important factor in achieving good process gas and steam distribution. Various catalyst shapes have been developed by each of the catalyst suppliers, and different catalyst geometries are used in different sections of the furnace tubes. Smaller catalyst provides a higher pressure drop but increased activity, while larger catalyst provides a lower pressure drop but decreased activity. In the upper third of the tubes the heat flux from the burners (in roof-fired designs) is highest, and specialized geometries that maximize heat transfer are used. In the lower portion of the tubes geometries that minimize pressure drop are employed.

Catalyst size and geometry also are important in the packing characteristics of the catalyst. It is essential to avoid bridging, which would create voids leading to hot spots, when the catalyst is charged (poured) into the reformer tubes. Catalyst loading must be carefully controlled to ensure bridging does not occur and to ensure there is minimum variation in catalyst loading between tubes.

C.3 Furnace Design

Reformer and cracking furnace design is a complex task involving the optimization of the number, diameter, and length of tubes, the number and location of burners, and the geometry of the furnace to achieve an economic design that delivers the required quantity of reformed gas with an acceptable pressure drop and tube metal temperature profile.

Reformers can be top-fired (M. W. Kellogg, Humphreys & Glasgow, and Uhde), side-fired radiant wall burners (Braun and ICI), and terraced wall (Foster-Wheeler). Bottom-fired furnaces are also theoretically possible, but not common in current reformer design. Top-fired reformers can be built to almost any size simply by adding additional burner rows between rows of tubes. Side wall and terrace wall designs are more limited because an exterior wall has to be located on each side of a tube row. An additional furnace cell has to be constructed once the maximum economical furnace box length is reached. The side wall and terrace wall designs however, offer better heat distribution control, which can be necessary when processing heavier hydrocarbon feeds, such as naphtha.

Cracking furnaces require very uniform heat distribution and are predominantly of side wall radiant burner design. Some of the lower capacity cracking furnaces use a terraced wall configuration.

In reformer furnaces, the reactions stop when the process stream exits from the catalyst filled tubes. As a result, there is flexibility in the way the effluent is collected and then transferred to the next stage, usually the secondary reformer (See DS 7-111G, *Ammonia and Ammonia Derivatives*). In M. W. Kellogg furnaces, the tubes of a row are welded into a horizontal header located within the furnace at the floor between the flue gas tunnels. A riser tube in the center of the header connects the “tube harp” to the outlet transfer line. In the Uhde furnaces, the tubes are rigidly connected to an outlet header located outside the furnace box under the furnace. This design permits access to both the inlet and outlet of each tube, permitting the tube to be cut and capped in the event of a leak and allowing the furnace to operate to the next scheduled shutdown before permanent repairs are made. All furnace designs use pigtails to connect the furnace tubes with the inlet header. The pigtails are convoluted sections of pipe, where the convolutions provide the flexibility needed to accommodate the thermal expansion that occurs as the furnace is heated. Furnaces designed by Humphreys & Glasgow and ICI also have outlet pigtails connecting the furnace tubes to the outlet header. Like the Uhde furnaces, this design also permits pinching off a tube at its inlet and outlet in the event of a leak. However, as tube materials, quality control, and monitoring have improved, tube leaks are less common and the need to isolate individual tubes to achieve long runs between plant turnarounds is less critical. Pinching should be done to a documented procedure in accordance with OEM guidelines by operators trained to the pinching procedure.

C.4 Primary Reformer and Cracking Furnace Good Practices

Most, if not all, primary reformers and cracking furnaces satisfy these recommendations or provide alternatives that meet their intent. They are being retained in this appendix for reference.

©2006-2022 Factory Mutual Insurance Company. All rights reserved.



Fig. 3. Terrace wall furnace

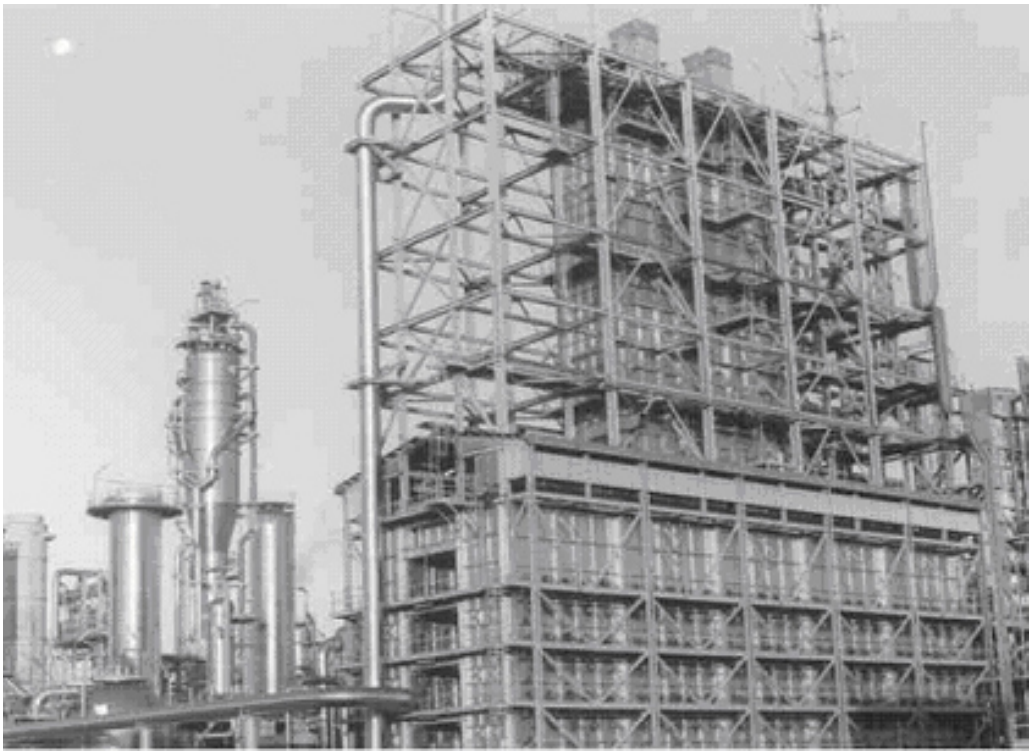


Fig. 4. Radiant wall burner furnace

©2006-2022 Factory Mutual Insurance Company. All rights reserved.

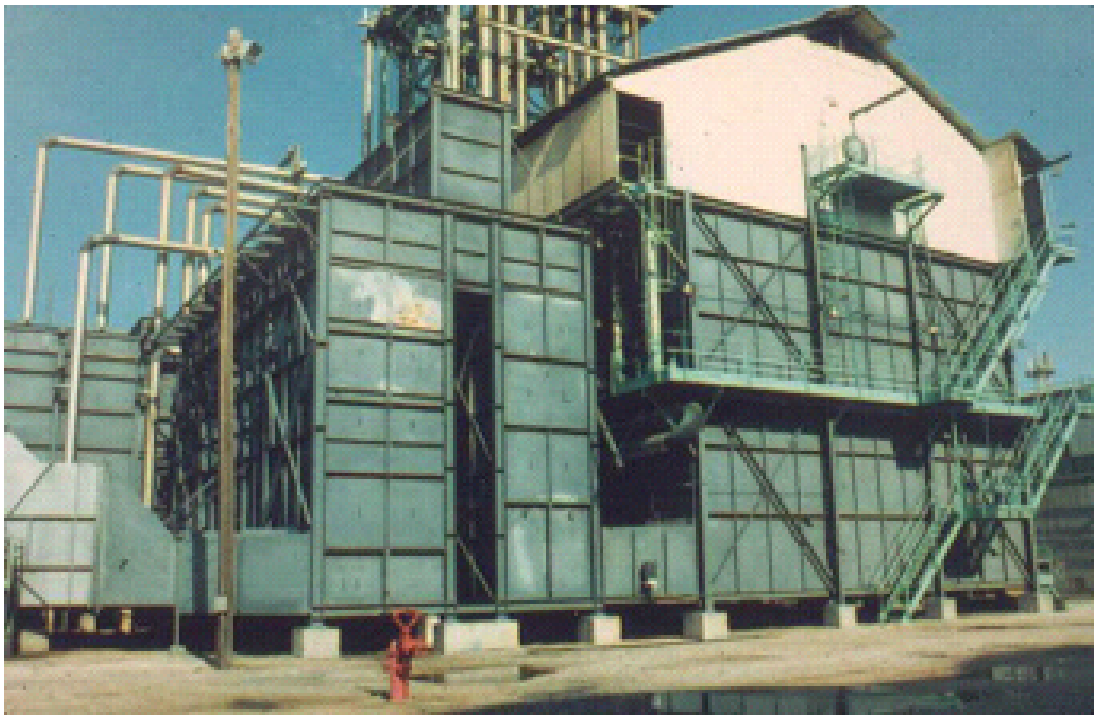


Fig. 5. Roof fired furnace

C.4.1 Equipment and Processes

A. Properly insulate the tops of tubes which typically extend above the furnace to minimize the potential for these tubes to cool to the steam dew point while steam is present.

B. In the event of air failure to the secondary reformer, the following recommended action should be taken in the primary reformer:

1. Isolate the process air supply to the air coil in the reformer convection section
2. Open the emergency steam supply to the process air coil to provide cooling.

C. In addition to the main supply, a reliable emergency source of compressed air and/or electric power should be provided to ensure prolonged service in case of electric power or air compressor failure.

D. Multiple controllers for fuel gas are sometimes used in parallel; the minimum number per reforming furnace is three. Therefore, failure causing an excess of flow will not be particularly hazardous, and can be easily detected by the furnace operator.

E. For enclosed furnaces, ensure adequate ventilation to prevent overheating of exterior furnace casing or the accumulation of flammable gases in the event of fuel train or process piping leaks.

F. Locate the combustion air inlet so a syngas, natural gas, or ammonia leak cannot be drawn into the furnace.

G. Use metal construction for furnace casing. Plastic panels are not acceptable.

C.4.2 Operation and Maintenance

A. When loading, determine and record the weight of catalyst loaded to each tube. Alternatively, ensure the expected volume of catalyst is used to fill each tube.

B. Maintain steady state conditions in the reformer as far as possible to avoid thermal cycling of tubing.

©2006-2022 Factory Mutual Insurance Company. All rights reserved.

C. Keep reformer hot during shutdowns of less than seven days unless work must be done in the reformer.

D. Maintain catalyst in optimum condition by complete desulfurization of feedstock, use of demineralized water for generating process steam, and avoidance of condensate formation in the reformer during shutdowns. It should be noted that the effect of a relatively small sulfur concentration in the feedstock is to dramatically increase tube wall temperature as a result of reduced catalyst activity.

E. Maintain optimum adjustment of firing to provide uniformity from row to row of tubing and the best feasible heat flux profile from top to bottom of the tubes.

F. Avoid sudden pressurizing and depressurizing of reformer tubes.

G. When catalyst activity loss becomes noticeable, change catalyst with minimum delay.

H. Annual scanning for mid-wall discontinuities by either high frequency eddy current or ultrasonic ‘‘through-transmission’’ techniques.

I. Schedule maintenance and inspections to minimize the need for shutdowns during cold weather.

J. Maintain support systems and other devices provided to accommodate thermal expansion of tubes, headers, risers, and collection manifolds in good calibration and condition.

K. Keep temperature measuring instruments in a good state of repair and calibration. Give all operators the same instructions to minimize differences in readings from operator interpretation.

L. Follow catalyst suppliers’ detailed instructions for loading, startup, operation, shutdown, and removal of catalyst.

M. Check for free movement of all parts, e.g., tube supports and furnace penetration seals, to ascertain there is no restraint to expansion and contraction of tubes.

N. If an operating or mechanical accident causes minor coke depositions on the primary reformer catalyst, the deposit may be removed and the catalyst activity restored by increasing steam-to-gas ratio somewhat above normal for a period of time. If the catalyst coking is considerable, the catalyst can be regenerated with steam, or it may be necessary to shut down the unit for replacement of the catalyst. Coking can also lead to tube failure.

O. During the shutdown of the reforming equipment, keep the catalyst under a steam atmosphere until its temperature has been reduced to 450°F (232°C) or less. (Note: The actual temperature may be catalyst dependent.)

P. In case of sudden mechanical failure of the reformer stack fan assembly, maintain adequate draft in the furnace to allow slow cooldown. One method that can be used is to install a low pressure differential switch between the flue gas duct and atmosphere, connected in such a manner that a valve opens to admit full steam flow to an aspirating jet ring in the furnace stack upon loss of fan.

Q. The gas burners must be operated in a proper manner to avoid flame impingement on the primary reformer catalyst tubes, as such improper operation could result in tube failures.

R. Maintain and inspect all controls and instruments on a regular basis. For alarms, interlocks, and trips, provide suitable means for simulation tests, making it possible to verify their proper performance without any interruptions of the process.

S. Safety instrumented systems (SIS) should be designed in accordance with DS 7-45, *Safety Controls, Alarms and Interlocks (SCAI)*, ISA S-84.01, Application of Safety Instrumented Systems for the Process Industries, and/or IEC 61058, Functional Safety of Electrical/Electronic/Programmable Electronic Safety-Related Systems. Review reformer protection at each plant as compared to the recommended protection in this data sheet. A process safety approach, including MOC, PHA, safety integrity level (SIL) of safety instrumented systems (SIS) analysis, and gap analysis is preferred. Perform annual simulated testing and calibration in accordance with OEM recommendations. Perform full functional testing at each turnaround.

T. Thoroughly train and test operators. Conduct re-certification at least every three years.

©2006-2022 Factory Mutual Insurance Company. All rights reserved.

C.5 Description of Primary Reformer

In many ammonia plants the primary reformer serves several purposes. In addition to reforming the gas/steam mixture, it is the heat source for preheating process air, process gas, and feedwater for the waste heat boiler, as well as superheating process steam.

In some synthesis plants the reformer (Fig. 6.) is only for reforming the gas/steam mixture. An auxiliary boiler, either gas or oil fired, is employed to produce steam in the 1500 psi (10,342 kPa) range for driving the system compressors. The auxiliary boiler is located immediately adjacent to the primary reformer and both are served by common forced draft (FD) and induced draft (ID) fans and combustion air preheater (Fig. 7). The convection section of the auxiliary boiler is the source of heat for superheating the high pressure steam and preheating process air to the secondary reformer, feedwater to the auxiliary and waste heat boilers, and the air/gas mixture to the primary reformer.

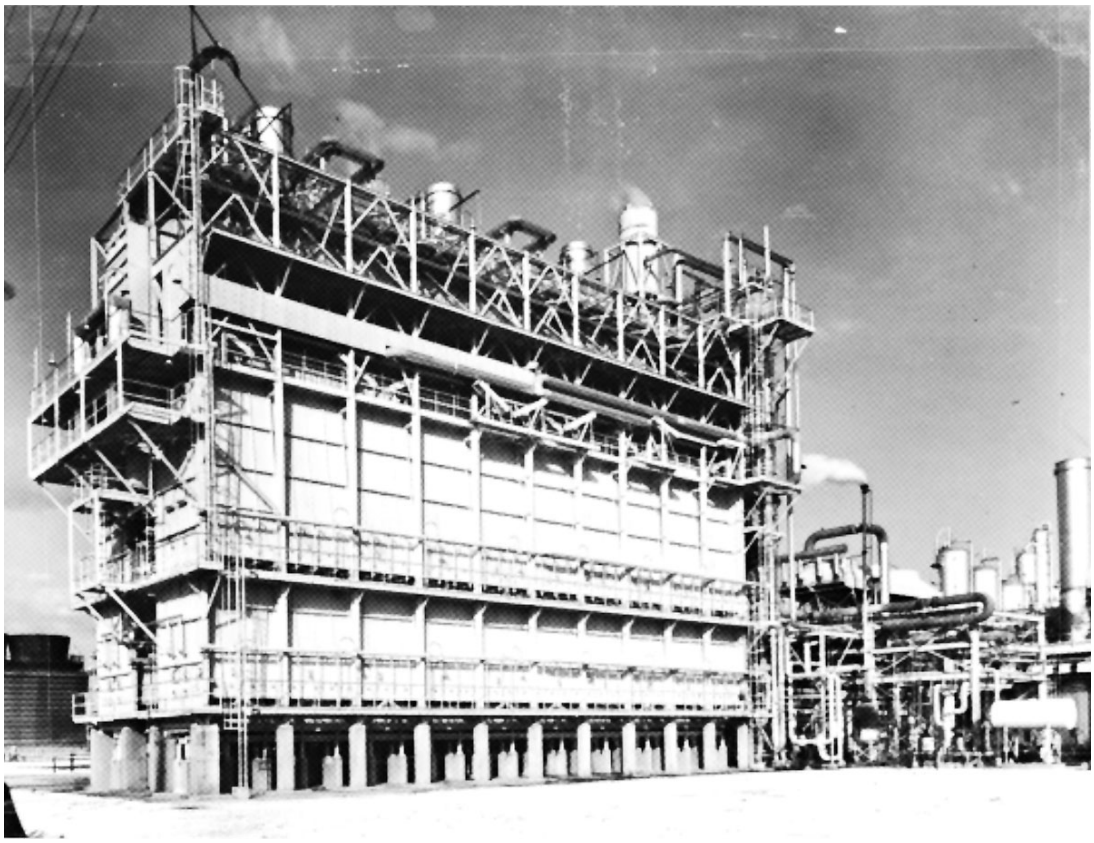


Fig. 6. Terrace wall primary reformer in modern ammonia synthesis facility (Foster Wheeler Energy Corp.)

The primary reformer consists of banks (sometimes referred to as ‘‘harps’’) of vertical tubes located in a refractory-lined furnace, which is fired by natural gas (Figure 8). The shape of the furnace, the arrangement of the tube banks, and the positioning of the burners varies with the design. Figure 9 shows typical designs.

The reformer (or catalyst) tubes normally range from 2.5 in. (63.5 mm) to 5 in. (127 mm) inside diameter, with wall thicknesses up to 1 in. (25.4 mm). Tube lengths range from 30 to 40 ft (9.1 to 12.2 m) or more and usually consist of 8 to 10 ft (2.4 to 3 m) sections welded together. The top ends are provided with either bolted or welded covers for loading the catalyst. The gas/ steam mixture is introduced through flexible connectors (pigtails) near the top. In some designs the bottom ends of the tubes connect directly into the outlet manifolds (Fig. 10). Other designs provide outlet loops or pigtails to permit expansion and contraction of the tubes. Because of the considerable length of the reformer tubes and extreme variations from cold to operating temperatures, the design of suspension systems must take expansion into consideration. Depending on the manufacturer, furnace tubes may be top supported with the bottom ends free to move to

©2006-2022 Factory Mutual Insurance Company. All rights reserved.

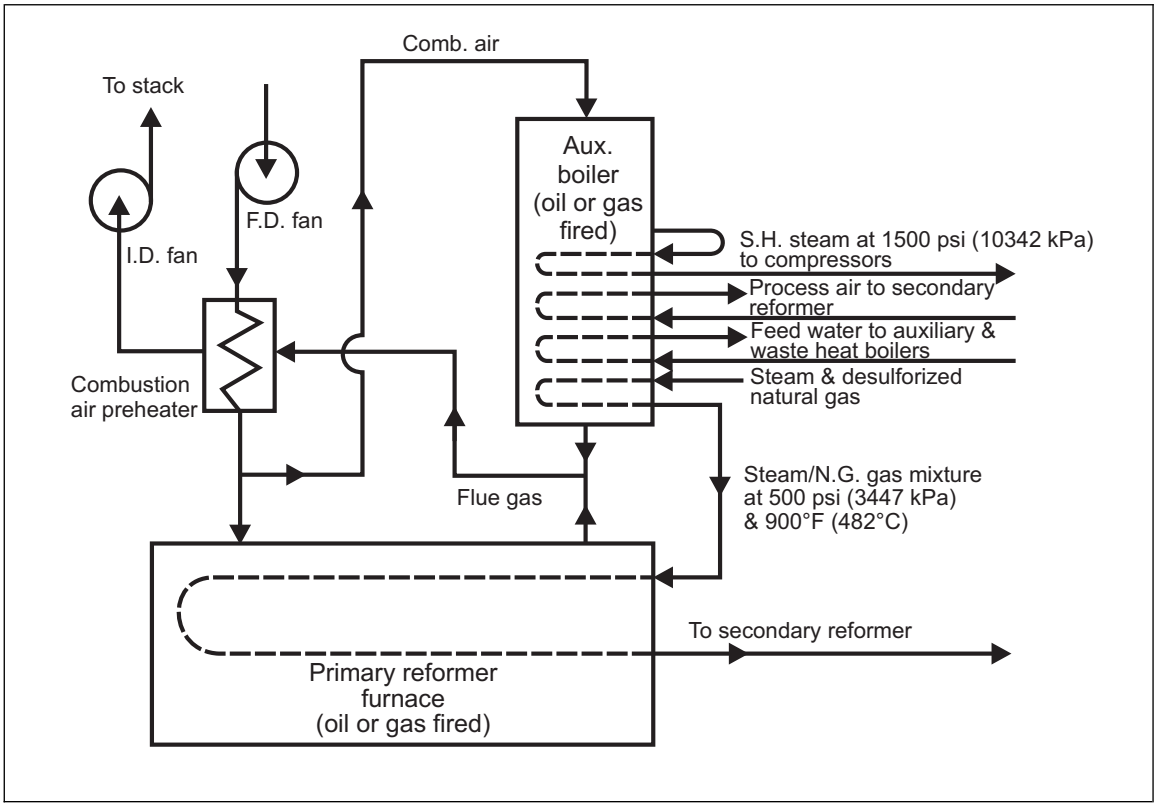


Fig. 7. Reformer & auxiliary boiler schematic

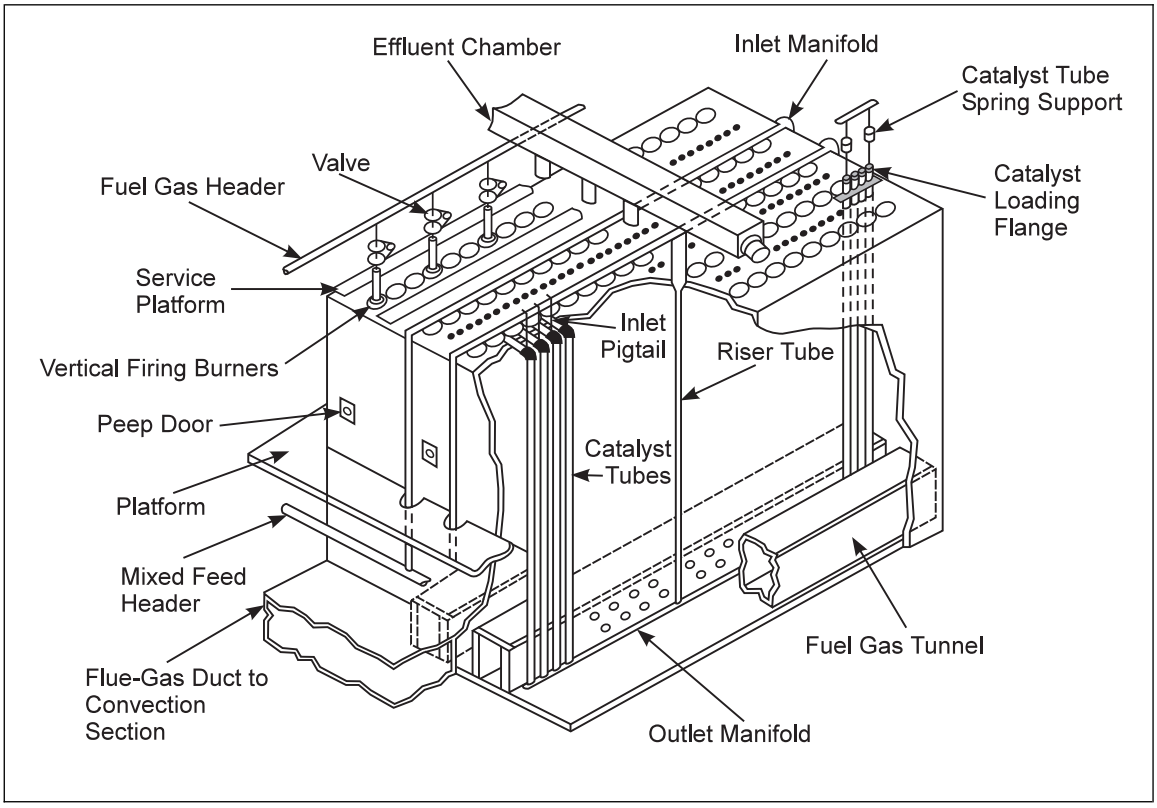


Fig. 8. Primary reformer furnace schematic

©2006-2022 Factory Mutual Insurance Company. All rights reserved.

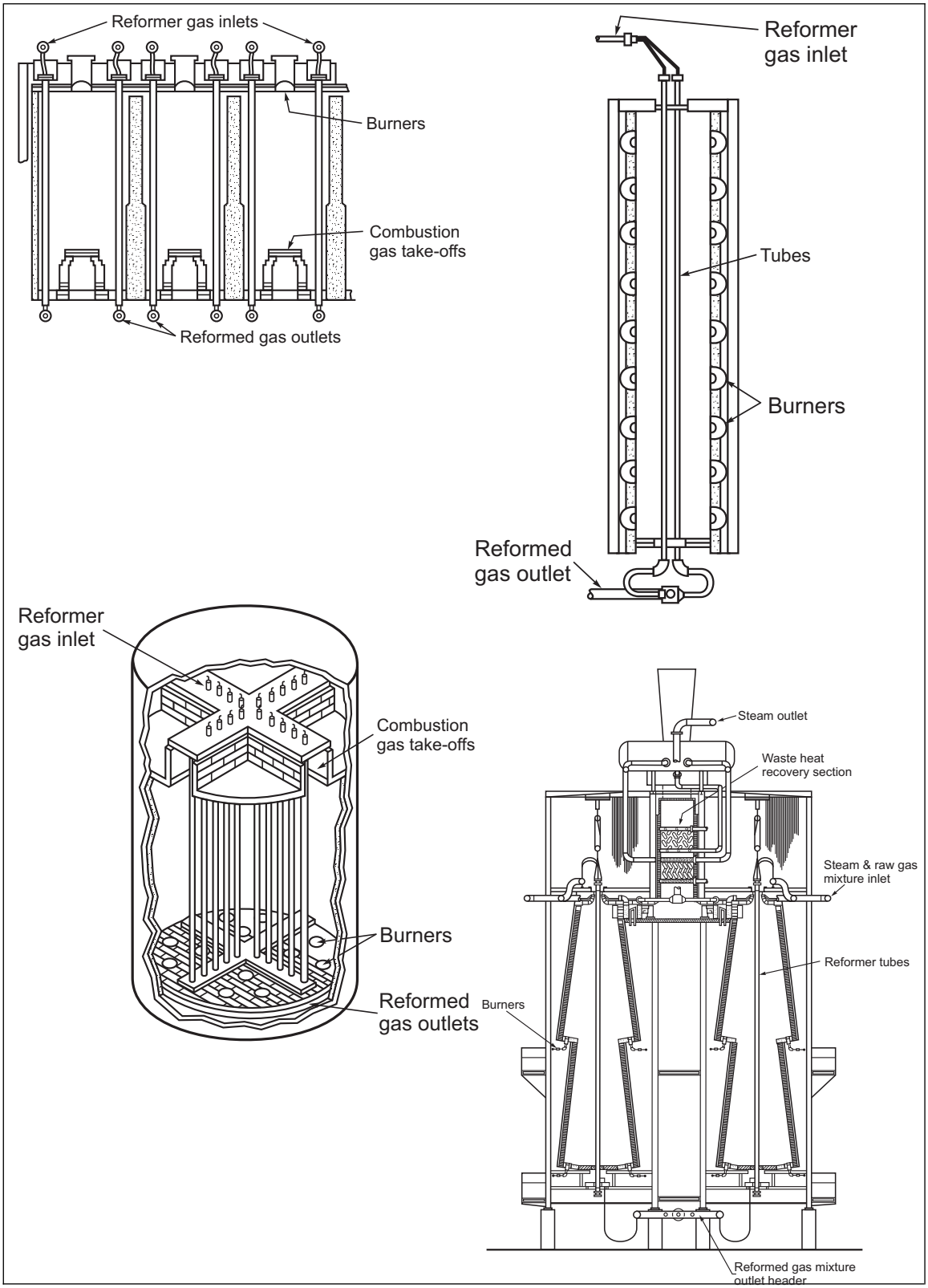


Fig. 9. Typical burner and catalyst tube arrangements

©2006-2022 Factory Mutual Insurance Company. All rights reserved.

accommodate thermal expansion and contraction, or tubes may be provided with fixed support at the bottom with the upper ends free to expand upward. Figure 11 is a schematic of one such system and Figure 12 shows details of one type of support assembly.

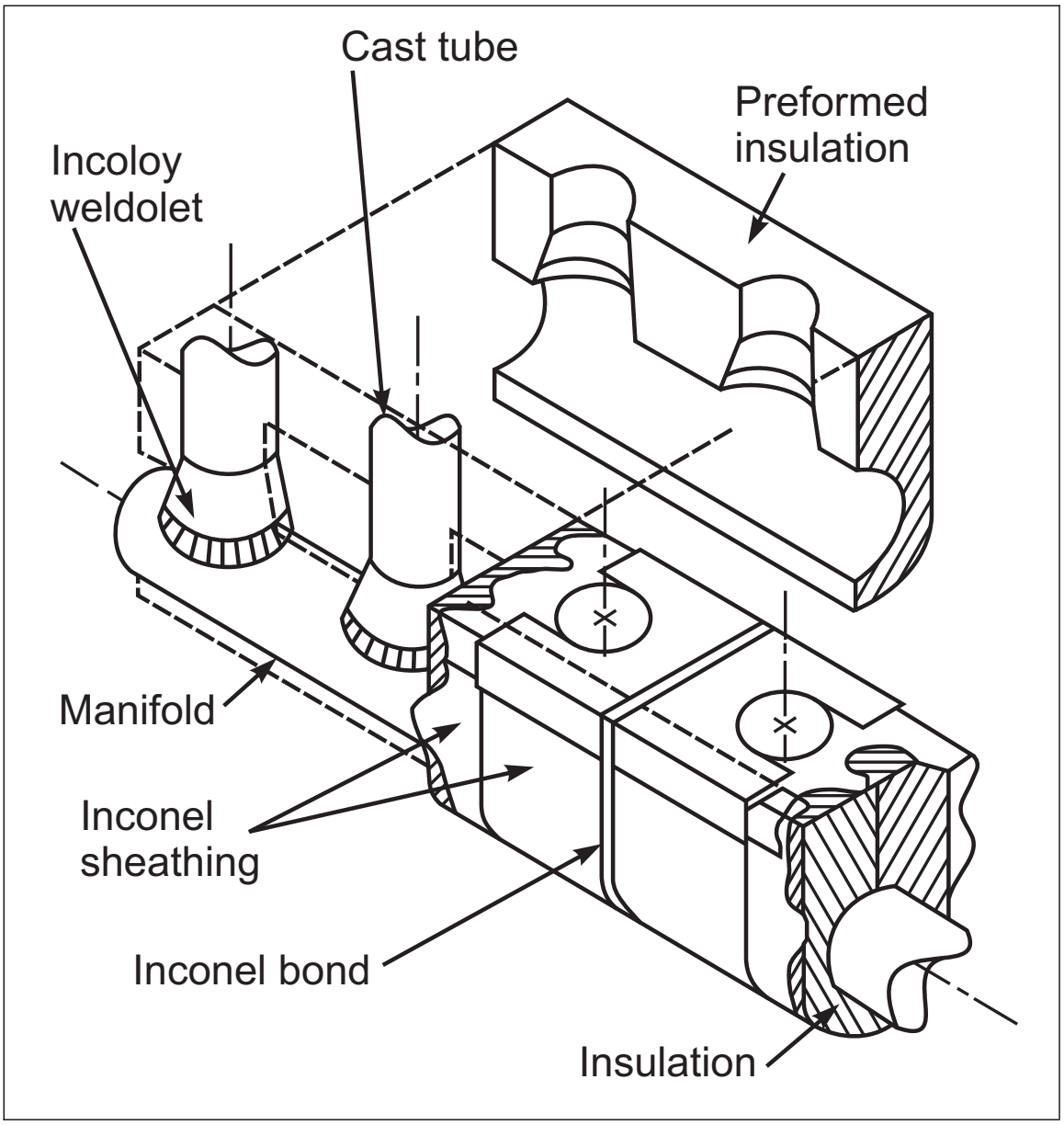


Fig. 10. Bottom manifold construction

C.6 Description of Cracking Furnace

The typical ethylene plant is divided into two basic sections: the cracking furnaces and the fractionation train. The furnaces can go by a number of names: ″cracking furnaces,″ ″pyrolysis furnaces,″ ″steam cracker,″ etc. Each of these names can be further modified by including the feedstock in their name (e.g., “ethane cracking furnace” or “naphtha cracker”). Multiple furnaces are used in a single ethylene plant with 12-15 furnaces being typical for larger plants.

Steam cracking is a process in which saturated hydrocarbons such as methane, ethane, or naphtha are broken down into smaller, often unsaturated, hydrocarbons. It is the principal industrial method for producing the lighter olefins, including ethylene and propylene.

©2006-2022 Factory Mutual Insurance Company. All rights reserved.

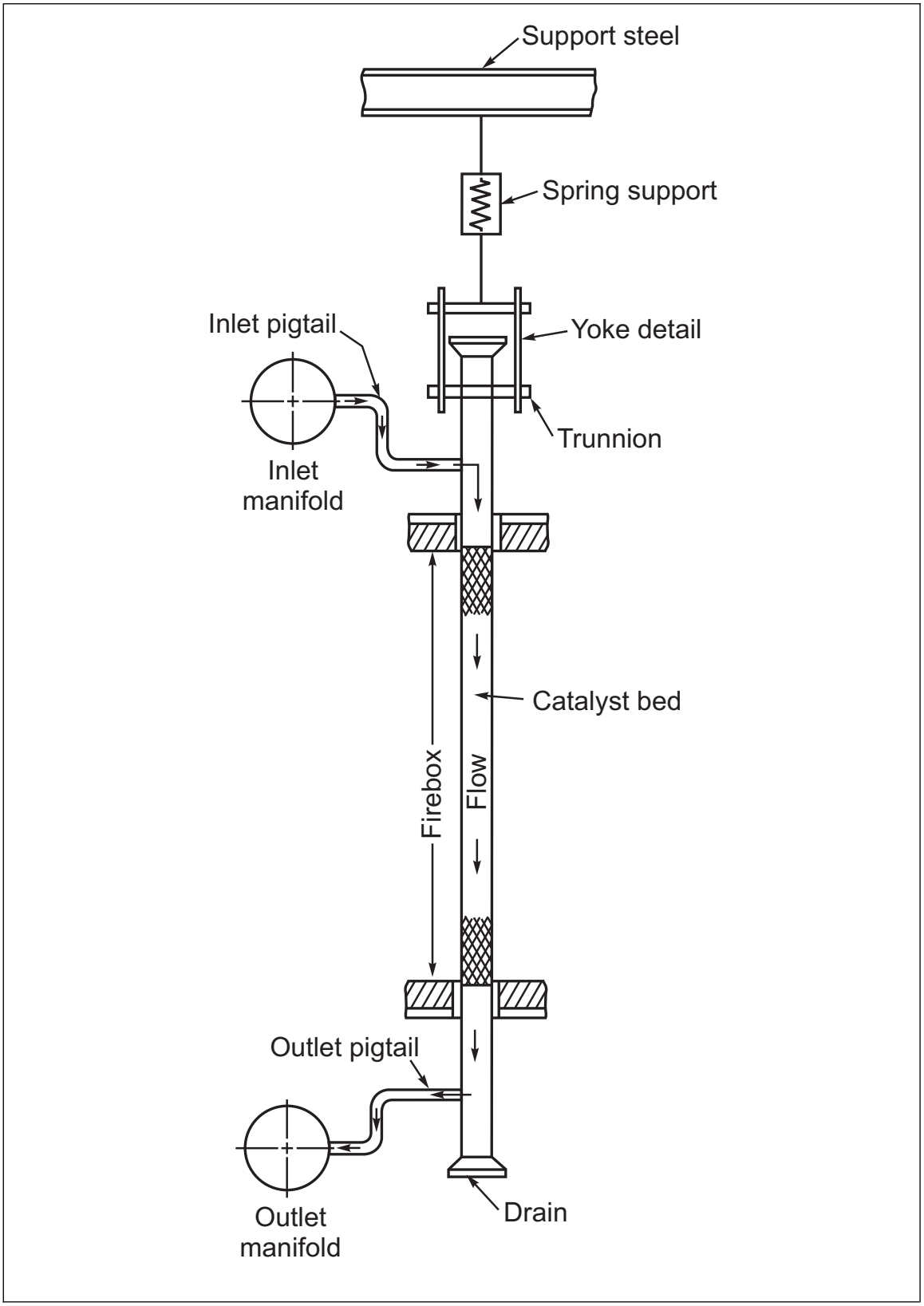


Fig. 11. Schematic of typical reformer tube completely supported from the upper end

©2006-2022 Factory Mutual Insurance Company. All rights reserved.

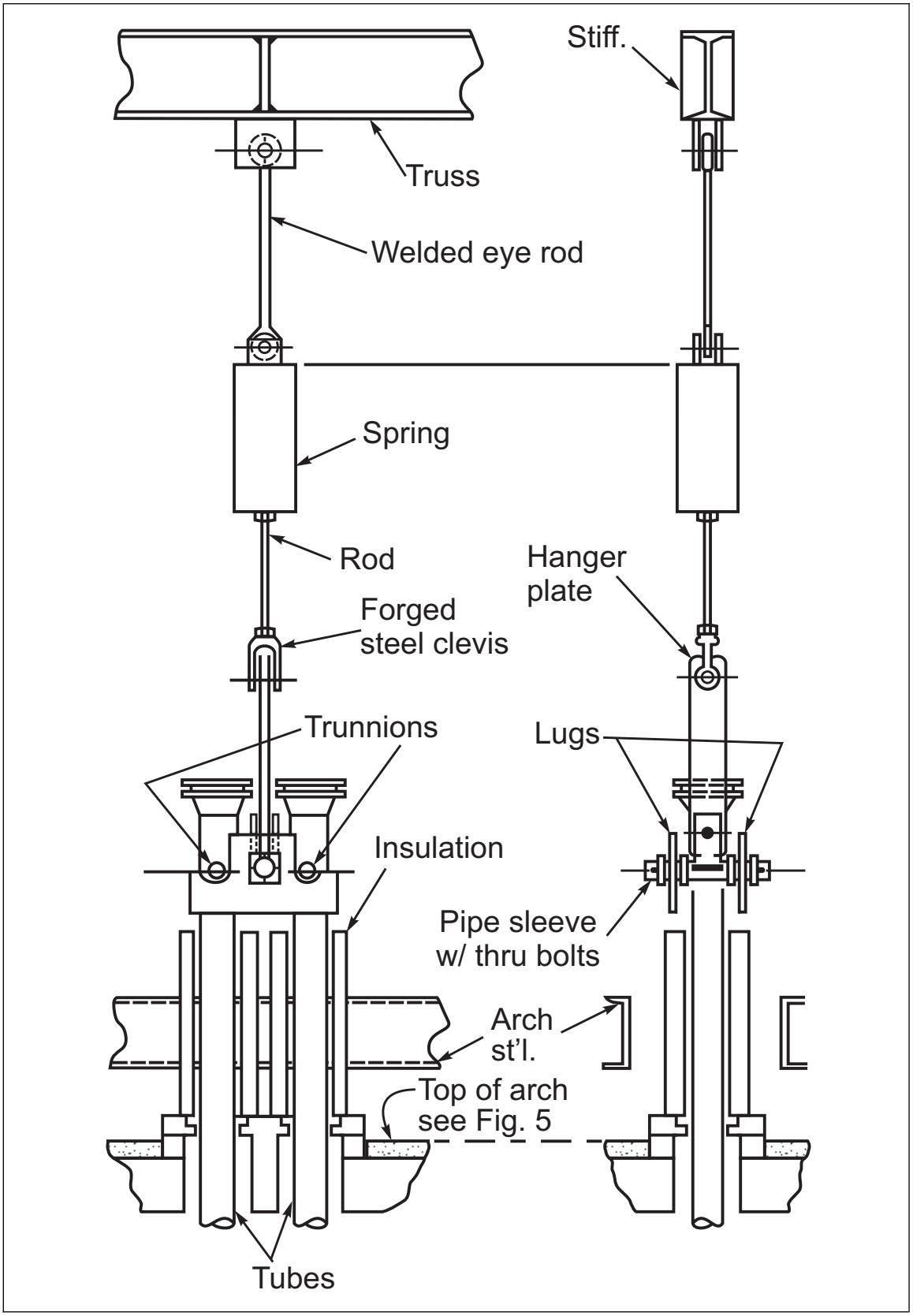


Fig. 12. Spring support assembly for reformer tubes

©2006-2022 Factory Mutual Insurance Company. All rights reserved.

The cracking furnace used in ethylene and propylene production is similar to many primary reformers used in ammonia plants. There are differences, however; rather than reforming the process gas, the gas is cracked to produce ethylene (C_2H_4) or, in some cases, propylene (C_3H_6). No catalyst is required, but steam-hydrocarbon ratio, residence time, temperature, and pressure are all critical parameters for obtaining high product yield. Also, the reactions don't stop when the process stream leaves the furnace until the stream is adequately cooled. External quench exchangers are close coupled to the outlets from the cracking furnace to quickly cool the process stream, which prevents loss of product (from reverse reactions).

The conversion of saturated to unsaturated hydrocarbons takes place in the furnace tubes of cracking furnace at inlet temperatures of 930°F-1255°F (500°C-680°C) and outlet temperatures of 1425°F-1605°F (775-875°C) in a pressure range of 22-72 psi (1.5-5 bar). To increase the ethylene/propylene yield and to minimize coke formation through undesired cracking reactions, this conversion takes place in the presence of water vapor. Sulfur may also added to the feed gas to control carbonization. It is also common practice to add dimethyl disulphide (DMDS) to the process stream to retard the formation of coke in the furnace tubes. As an added benefit, this also reduces the formation of CO, which acts as a catalyst poison in the acetylene reactors.

The cracking furnace is divided into two sections: a radiant section and a convection section. Process gas enters the convection section and exits from the radiant section. Crossover pipes deliver the process gas from the convention section to the radiant section.

In the radiant section, the process gas/steam mixture is heated and reactions take place. The convection section has multiple horizontal heat exchangers:

- Economizer: Water for steam generation is preheated.
- Superheater sections: Process steam from steam drum is superheated.
- Pre-heater: The process gas/steam mixture is heated prior to entering the radiant section.

The metallurgy of the heat exchanger coils in the convection section range from high alloy steel in the preheater to carbon steel in the economizer. Dissimilar metal welds between different grades of steel are made outside of the furnace box.

The residence time in the furnace tubes where the cracking reactions occur is brief, with the process stream traveling at high velocity. Upon leaving the furnace, the process stream is quickly quenched in the transfer line exchangers (TLEs) to stop the reaction. A TLE is typically a jacketed pipe in a vertical or horizontal orientation, followed by secondary and sometimes tertiary shell and tube heat exchangers.

The heat removed from the process stream is used to generate high-pressure steam, which is used to drive cracked gas and refrigeration compressors. After the heat exchanges, the process stream is cooled further with oil-quenching and water-quenching systems. The cooled stream is compressed to an optimum pressure for separating the various chemical components in the fractionation section. The stream is also run through a caustic wash system to remove H_2S and CO_2 between compression stages.

The cracking process results in a gradual deposition of coke, a form of carbon, on the ID of the furnace tubes. This causes tubes to operate at higher temperatures and degrades the efficiency of the cracking furnace. As a result, cracking furnaces have to be periodically de-coked. Process run times between decoking cycles can range from a few weeks to a few months depending on tube diameter and coking rates.

De-cokes require the furnace to be isolated from the process, after which a flow of steam or a steam/air mixture is passed through the furnace tubes to convert the hard solid carbon layer to carbon monoxide and carbon dioxide. When de-coking is complete, the furnace can be returned to service. Most plants are designed to maintain full production with one furnace off-line for de-coking.

Products produced in the reaction depend on the composition of the feed, the hydrocarbon-to-steam ratio, the cracking temperature, and the furnace residence time. Since residence time of the process stream in the radiant section is critical, much attention has been given to radiant tube design, and each manufacturer of cracking furnaces has their own proprietary and patented configuration. Tube diameters are generally smaller in cracking furnaces than in primary reformers and the tubes operate at higher temperatures. Cracking furnace tube life is generally about half the expected tube life in catalytic reformer furnaces.

Most cracking furnaces use radiant wall burner designs with many small (1 million Btu/ hr [0.3 MW_t]) burners spaced evenly over the furnace box side walls. A furnace box will only have a single row of tubes, heated on both sides by the radiant wall burners. Two furnace boxes are often constructed with a common convection

©2006-2022 Factory Mutual Insurance Company. All rights reserved.

section above them in a “pants legs” configuration. Some older, less-efficient designs use a terrace wall construction with several rows of burners on each side of the tube.

Advanced control of the cracking furnace is critical to the ethylene plant’s efficiency. ″Over-cracking″ of the feed stream can lead to premature furnace shutdowns due to excessive coke formation, while ″under-cracking″ reduces overall production.

C.7 Metal Dusting

‘‘Metal dusting’’ is the term used to describe the catastrophic degradation of metals in carbonaceous gases at elevated temperatures, usually in the range of 850°F to 1650°F (450°C to 900°C), in which the metal surface rapidly becomes severely pitted. General metal wastage has also been observed. The term is derived from the appearance of the pits which often contain a dust of loose, powdery, magnetic corrosion product of graphite, metal carbides and oxides.

Degradation of metallic components by metal dusting is a major issue in plants such as those involved in hydrogen production, ammonia synthesis, and methanol reforming.

Whether an alloy is likely to be carburised or decarburised depends on the carbon activity in the environment and that of the alloy. Carbon activity proceeds in two reactions:

$$CO + H_2 \rightleftarrows C + H_2O$$
$$2CO \rightleftarrows CO_2 + C$$

Studies have shown that metal dusting in the secondary reformer feed is most likely to proceed due to the influence of both of these reactions, and operating experience has proven these studies to be correct.

A study of published literature on metal dusting shows that experience from various plants around the world appears to be contradictory concerning the success or failure of specific materials in resisting attack. Some plants have reported severe metal dusting of Alloy 800, while others operating under similar conditions have not. Similarly, high nickel alloys have been reported to perform well in some plants, yet not in others. Type 304 stainless steel has been reported to out-perform Alloy 800 in one instance, and to outperform the higher Cr-Ni type 310 stainless steel in another.

The explanation for these apparent anomalies presumably lies with differences in the process environments that affect the stability of the protective oxide films. Unfortunately, sufficient process data is not generally provided to enable any meaningful comparisons to be made. As a result, studies are underway to compare the performance of various candidate materials in a specific reformer environment.

One such program is being sponsored by the U.S. Department of Energy, with the stated objective of developing new high-strength copper-based alloys that are resistant to metal dusting attack in various process-industry sectors at temperatures up to 1475°F (800°C), and to engineer the surfaces of currently available metallic structural Ni-based alloys to provide adequate mechanical properties at temperatures of interest to resist metal dusting degradation. Material suppliers are participating in this research and development program and this ensures the knowledge gained from the program will result in the availability of the new materials for incorporation into process equipment.

©2006-2022 Factory Mutual Insurance Company. All rights reserved.