FIRE PROTECTION PUMPS

Table of Contents

Page

1.0 SCOPE 3
1.1 Hazards 3
1.2 Changes 3
2.0 LOSS PREVENTION RECOMMENDATIONS 3
2.1 Introduction 3
2.2 Construction and Location 3
2.2.1 Pump House/Pump Room 3
2.2.2 Fire Pump Alarms 4
2.2.3 High-Rise Buildings 5
2.3 Protection 8
2.3.1 General 8
2.3.2 Suction Piping 8
2.3.3 Discharge Piping 10
2.3.4 Pressure Relief Valves 10
2.3.5 Pressure Reducing Valves 11
2.3.6 Circulation Relief Valve 11
2.4 Equipment and Processes 11
2.4.1 Split Case, End Suction, and In-Line Centrifugal Pumps 11
2.4.2 Vertical Shaft Turbine-Type Pumps 11
2.4.3 Positive Displacement Pumps 11
2.4.4 Mounting, Coupling and Alignment 11
2.4.5 Mechanical Seals 12
2.4.6 Pump Sizing 12
2.4.7 Pump Starting, Stopping and Control 13
2.4.8 Sequence Starting 13
2.4.9 Monitoring/Testing Systems 13
2.4.10 Run-Period Timers 13
2.4.11 Pressure Switches 13
2.5 Electric Driven Pumps 15
2.5.1 Power Supply Arrangement 15
2.5.2 Electric Motors 17
2.5.3 Electric Motor Controllers 17
2.5.4 Variable Speed Electric Motor Controllers 18
2.5.5 Power Transfer Switches 18
2.6 Diesel Engine-Driven Pumps 18
2.6.1 Diesel Engine Sizing 18
2.6.2 Diesel Engine Controller 19
2.6.3 Fuel, Fuel Tank and Piping 19
2.6.4 Ventilation 19
2.6.5 Batteries 20
2.6.6 Engine Cooling 20
2.6.7 Diesel Engine Speed 21
2.6.8 Variable-Speed Diesel Pumps and Pressure Limiting Drivers (PLDs) 21
2.7 Operations and Maintenance 21
3.0 SUPPORT FOR RECOMMENDATIONS 22
3.1 Pump Sizing 22

©2026 Factory Mutual Insurance Company. All rights reserved. This information is proprietary and confidential to the Factory Mutual Insurance Company and its subsidiaries (FM) and is intended strictly for the internal use of authorized employees of FM.

3.2 Construction and Location 22
3.3 High-Rise Buildings 22
3.4 Pump Suction and Discharge Piping 22
3.5 Other Pumps Used for Fire Protection 23
3.6 Vertical Shaft Turbine-Type Pumps 23
3.7 Positive Displacement Pumps 23
3.8 Mounting, Coupling and Alignment 23
3.9 Mechanical Seals 24
3.10 Pressure Relief Valves 24
3.10.1 System Design Considerations 24
3.10.2 Example 24
3.10.3 When Relief Valves are Necessary 25
3.11 Variable Speed Pumps 25
3.12 Pump Starting, Stopping and Control 25
3.12.1 Purpose of Manual Pump Stopping 25
3.12.2 Role of the Jockey Pump 25
3.12.3 Fire Pump Startup Considerations 25
3.13 Electric Motor-Driven Pumps 26
3.14 Diesel Engine-Driven Pumps 26
3.14.1 Diesel Fuel Storage and Biofuels 26
3.14.2 Engine Cooling Systems (General) 26
3.14.3 Heat-Exchanger–Cooled Engines 27
3.14.4 Radiator Cooling 27
3.14.5 Engine Governor and Speed Behavior 27
3.14.6 Variable-Speed Diesel Pumps 27
3.15 Fire Pump Monitoring and Automated Testing 28
3.15.1 System Functions 28
3.15.2 Operating Requirements 28
3.15.3 Limitations of Basic Test Timers 28
4.0 REFERENCES 28
4.1 FM 28
4.2 NFPA 29
4.3 Other 29
APPENDIX A GLOSSARY OF TERMS 29
APPENDIX B DOCUMENT REVISION HISTORY 32
APPENDIX C ACCEPTANCE TESTING 33
C.1 Flow Tests 33
C.1.1 Field Acceptance Test Procedure 34
C.1.2 Testing Variable-Speed Electric Pumps, Variable-Speed Diesel Pumps, and Pressure Limiting Drivers (PLDs) 36
C.1.3 Speed Correction 36

List of Figures

Fig. 2.2.3.2-1. Two-zone pump system with redundant supply from gravity tanks 6
Fig. 2.2.3.2-2. Multi-zone pump system arrangement with top floors fed from roof level pump 7
Fig. 2.3.2.2. Correct and incorrect pump suction pipe reducer 8
Fig. 2.3.2.3. Correct and incorrect pump suction pipe arrangements 9
Fig. 2.4.11.3. Schematic of an acceptable pressure sensing line installation 14
Fig. 2.5.1.3.1-1. Dedicated fire pump motor electrical feeder 16
Fig. 2.5.1.3.1-2. Fire pump electrical feeder connected ahead of all other facility loads 16
Fig. 2.6.6.1.3. Diagram of a typical heat exchanger, cooling water, piping arrangement. 21
Fig. C.1.3-1. Water supply graph 36
Fig. C.1.3-2. Effect of variations in speed on pump performance curve 37

List of Tables

Table 2.2.2.1. Local and Remote Alarms 5
Table 2.2.2.3. Additional Visual or Audible Notifications 5

©2026 Factory Mutual Insurance Company. All rights reserved.

1.0 SCOPE

This data sheet provides recommendations for the selection, installation, and acceptance testing of property fire protection pumps supplying water for private fire protection. These recommendations assume the use of FM Approved equipment unless otherwise noted and address key considerations, including pump house construction, suction and discharge piping, power supplies, electric drive and control, and internal combustion engine drive and control.

This data sheet is to be used in conjunction with Data Sheet 3-29, *Reliability of Fire Protection Water Supplies*, to ensure a reliable water supply, or when an enhanced water supply is provided.

Guidance on the inspection, testing and maintenance of fire pump systems can be found in Data Sheet 2-81, *Fire Protection System Inspection, Testing and Maintenance*.

Guidance on water supplies can be found in Data Sheet 3-1, *Tanks and Reservoirs for Interconnected Fire Service and Public Mains*, Data Sheet 3-2, *Water Tanks for Fire Protection*, Data Sheet 3-4, *Embankment-supported Fabric Tanks*, and Data Sheet 3-6, *Lined Earth Reservoirs for Fire Protection*.

For guidance on installation of automatic sprinklers, see Data Sheet 2-0, *Installation Guidelines for Automatic Sprinklers*.

1.1 Hazards

Fire pumps are critical components of a facility's fire protection system, intended to supply water for fire protection purposes and required to operate with a high degree of reliability. They are expected to automatically start upon loss of system pressure or by other automatic fire detection means, and to deliver the necessary water flow and pressure without interruption during fire conditions. Achieving this level of performance depends on proper selection and installation of fire pump components, as well as periodic inspection, testing, and maintenance. Failure of a fire pump during a fire can result in catastrophic property loss.

1.2 Changes

October 2026. This data sheet has been fully revised. Significant changes include:

A. Added new guidance on FM Approved remote pump monitoring and testing systems.

B. Clarified guidance for the use of multiple pumps of differing sizes.

C. Expanded guidance in Appendix C on acceptance testing of fire pumps to include starting the pump from emergency power systems (generators, etc.).

D. Clarified the need for pressure relief valves when using diesel-driven, variable-speed pumps.

E. Updated the guidance for the use of biofuels in fire pumps to align with industry guidance on the use of these fuels in diesel-driven fire pumps.

F. Updated guidance for setting the diesel engine speed to align with the guidance in FM 1333, *Examination Standard for Diesel Engine Fire Pump Drivers*.

G. Made editorial updates to ensure consistency with other FM data sheets.

2.0 LOSS PREVENTION RECOMMENDATIONS

2.1 Introduction

2.1.1 Use FM Approved equipment, materials, and services whenever they are applicable. For a list of products and services that are FM Approved, see the *Approval Guide*, an online resource of FM Approvals.

2.2 Construction and Location

2.2.1 Pump House/Pump Room

2.2.1.1 Locate the pump in a detached building of noncombustible construction a minimum of 50 ft (15 m) away from protected buildings.

When a detached building is not feasible:

©2026 Factory Mutual Insurance Company. All rights reserved.

A. Locate the pump in a room with sufficient protection from fire, falling debris, and other exposures that would damage the pump or electrical feeder cables, or prevent the pump operator from remaining near the pump during a fire.

B. Provide an access door to the pump room along a building exterior wall.

C. Protect the fire pump from all other areas of the building by 2-hour, fire-rated construction. Where the pump room and adjacent areas are protected with an automatic sprinkler system, the construction can be reduced to a 1-hour fire-rating.

D. Do not locate the fire pump room within or attached to an unprotected building.

2.2.1.2 Do not use the pump room or pump house for storage.

2.2.1.3 Provide automatic sprinklers in pump rooms/houses.

2.2.1.4 Maintain the temperature of a pump room or pump house above 40°F (4°C). Where diesel engine fire pumps are without jacket or oil heaters, the pump room should be maintained at a minimum temperature of 50°F (10°C).

2.2.1.5 Pitch floors for adequate drainage of escaping water, away from critical equipment such as the pump, driver, controller, etc.

2.2.1.6 Provide a floor drain for the pump room or pump house to allow for easy removal of water from packed seals and pressure-drop testing.

2.2.1.7 Locate the pump house/room outside the 0.2% annual exceedance (500-year) flood zones (by both elevation and footprint) per Data Sheet 1-40, *Flood*.

2.2.1.8 Construct fire pump rooms or buildings, to provide sufficient space for ingress/egress, and to allow access to equipment and pipework for inspection, testing and maintenance activities.

2.2.1.9 Arrange any electrical control circuit wiring that extends outside the fire pump room, so that failure of that wiring (open or short circuit) does not prevent operation of the pump.

2.2.1.10 Protect all control wiring to any remote pressure sensors against mechanical damage.

2.2.2 Fire Pump Alarms

2.2.2.1 Provide the visual or audible local alarms and remote alarms connected to a constantly attended location per Table 2.2.2.1.

©2026 Factory Mutual Insurance Company. All rights reserved.

Table 2.2.2.1. Local and Remote Alarms

Condition	*Local Alarms/Gauges*		*Remote Alarms*
	Electric Driven Pumps	Diesel Driven Pumps	
Pump running	X	X	X
Loss of power (AC and/or DC)	X	X	X
Controller connected to alternate power source (battery bank/generators where applicable)	X		X
Controller off/in manual position/in TEST position (where applicable)	X	X	X
Failure to start	X	X	X
Alternative power supply failure and transfer switch (if provided)	X		X
Pump room temperature	X	X	X
Transfer switch and alternative power source available	X	X	X
Overspeed	N/A	X	Optional
Low oil pressure	N/A	X	Optional
Coolant high temperature	N/A	X	Optional
Engine failure	N/A	X	Optional
Fuel level	N/A	X	Optional
Clogged strainer for cooling water	N/A		Optional
Water jacket temp gauge or low engine temperature (where heaters are installed)	N/A	X	Optional
Tachometer	N/A	X	Optional
Run time meter	N/A		Optional
Battery voltage	N/A	X	Optional
Amp meter if engine has alternator/generator	N/A	X	Optional

2.2.2.2 Do not substitute alarm notifications to facility personnel's personal device as a constantly attended location.

2.2.2.3 Provide the following additional visual or audible notifications per Table 2.2.2.3.

Table 2.2.2.3. Additional Visual or Audible Notifications

	Electric Driven Pumps	*Diesel Driven Pumps*
Open fuses or circuit breaker (all 3 phases if applicable)	X	
Overspeed		X
Low oil pressure		X
Coolant high temperature		X
Engine failure		X
Fuel level		X
Clogged strainer for cooling water		X
Water jacket temp gauge		X
Tachometer		X
Run time meter		X
Battery voltage		X
Amp meter if engine has alternator/ generator		X

2.2.3 High-Rise Buildings

2.2.3.1 Locate all fire pumps to provide direct access to the pump from the street level.

2.2.3.2 Supply sprinkler system water directly from a fire pump(s), a gravity tank of sufficient capacity and height above the supplied sprinklers, or a combination of pumps and gravity tanks. Size the gravity tank filling pump so that it can refill the tank in eight hours or less. See Figure 2.2.3.2-1 for a typical two-zone pump

©2026 Factory Mutual Insurance Company. All rights reserved.

system with redundant supply from gravity tanks. See Figure 2.2.3.2-2 for a typical two-zone pump system with one pump in the basement feeding the lower zones of the building, and a pump on the roof feeding the upper zones.

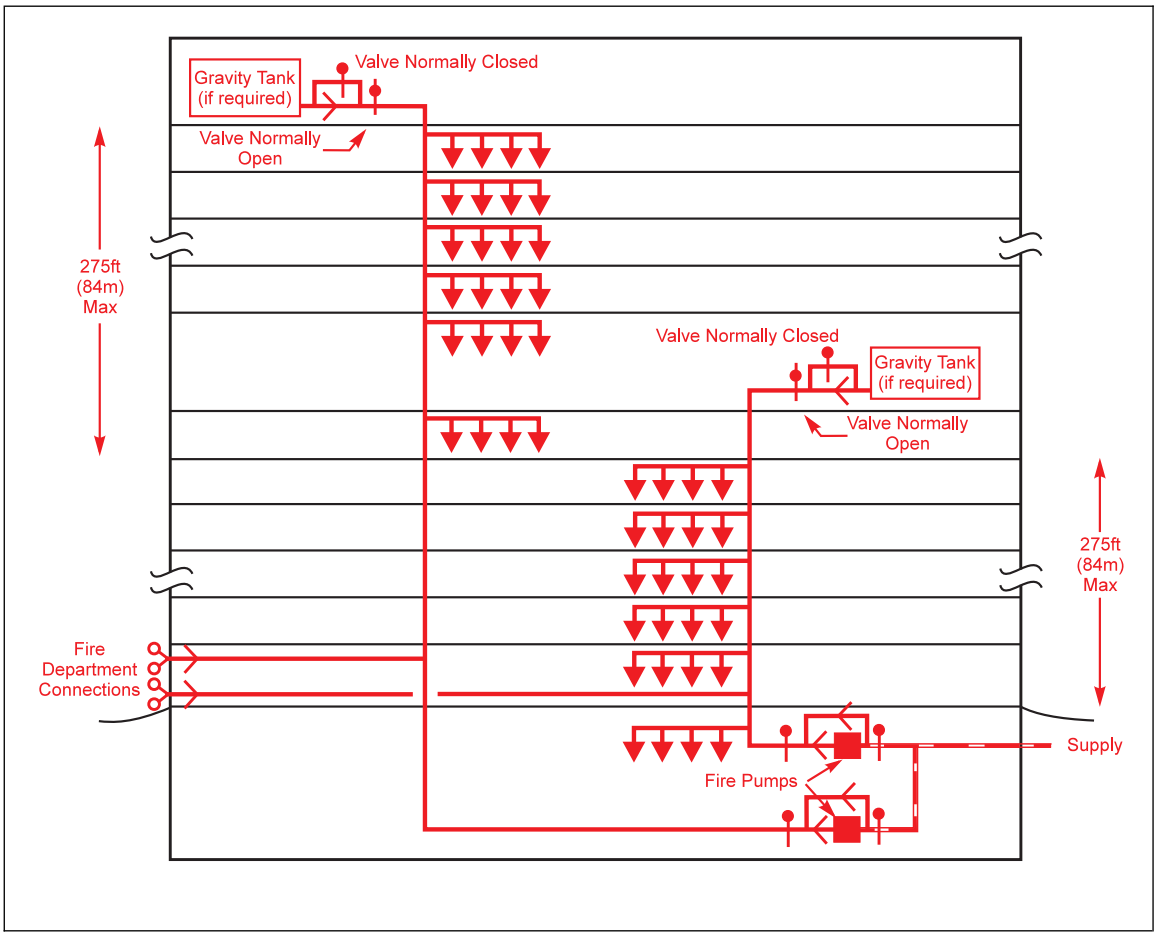

Fig. 2.2.3.2-1. Two-zone pump system with redundant supply from gravity tanks

©2026 Factory Mutual Insurance Company. All rights reserved.

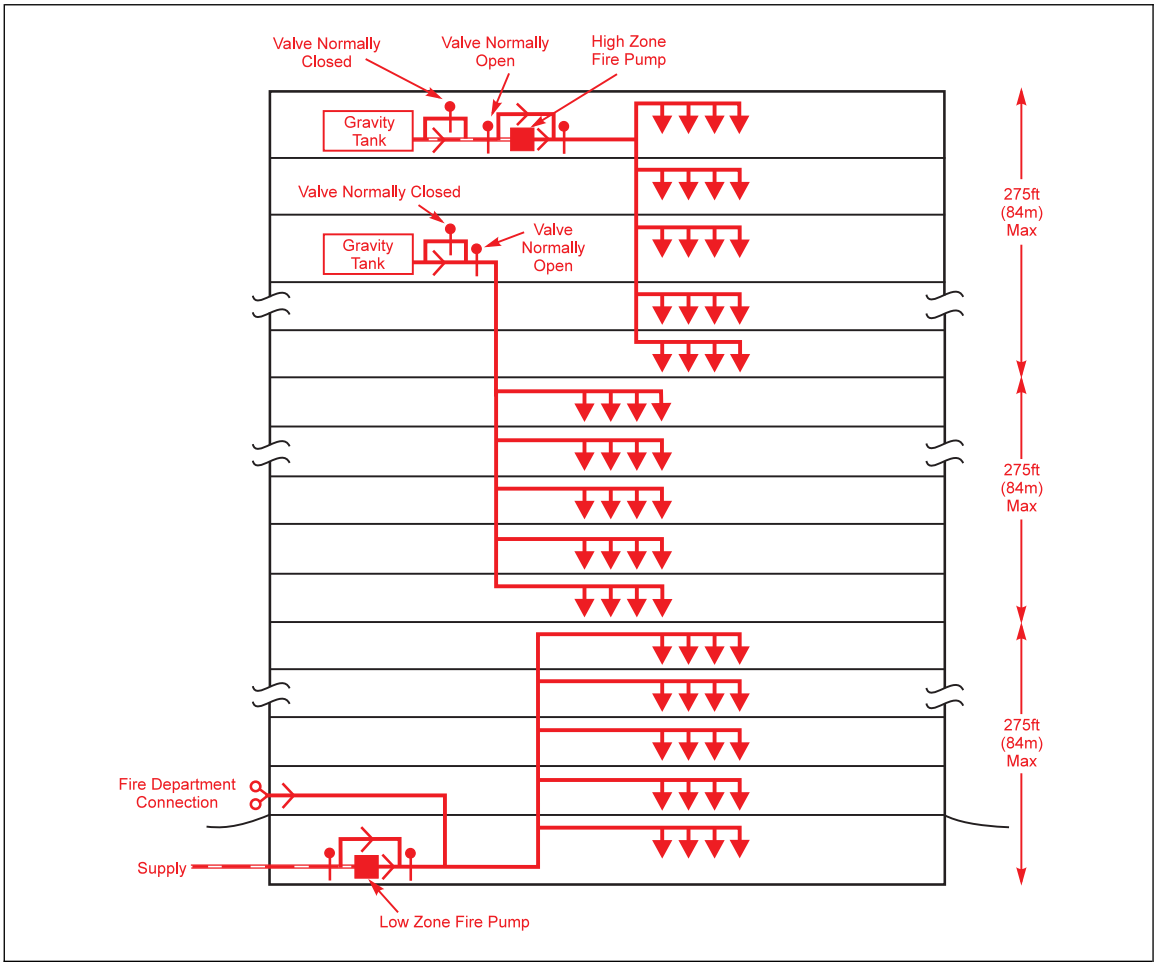

Fig. 2.2.3.2-2. Multi-zone pump system arrangement with top floors fed from roof level pump

2.2.3.3 Limit the size of fire protection system zones in high-rise buildings to a maximum of 275 ft (85 m) vertically.

- Provide each zone with its own fire pump and independent fire service connections.
- For those zones above 275 ft (85 m), use high-pressure piping and fittings at the pump discharge and the lower elevations of the building. These fittings should have a rated working pressure equal to or greater than the maximum no flow (churn) pressure of the fire pump, plus the maximum anticipated static suction pressure.

2.2.3.4 Where electric motor pump drivers are used, and the height of the structure is beyond the pumping capability of the fire service apparatus, provide a reliable emergency source of power for the fire pump installation.

See Data Sheet 5-23, *Design and Protection for Emergency and Standby Power Systems*.

2.2.3.5 Avoid installing fire pumps in series.

2.2.3.5.1 Series staging of fire pumps is acceptable when ALL the following apply:

A. The pumps are in a common pump room.

B. Pumps are not staged vertically. (i.e. where one or more pumps are located on upper building floors that are supplied from pumps on lower zones.)

C. The pumps are arranged to facilitate regular testing and maintenance in accordance with Data Sheet 2-81, *Fire Protection System Inspection, Testing and Maintenance*.

©2026 Factory Mutual Insurance Company. All rights reserved.

D. The pumps are arranged so that they do not start simultaneously.

E. The pump starting sequence is arranged so the maximum time between pump starts is 10 seconds.

F. The pumps are arranged so that failure to start one pump does not prevent subsequent pumps from starting.

G. No more than three pumps are installed in series.

H. No pressure-reducing/regulating valves are installed between pumps installed in series.

2.2.3.6 Design systems to minimize the use of pressure-reducing valves. See Data Sheet 3-11, *Flow and Pressure Regulating Devices for Fire Protection Service*.

2.3 Protection

2.3.1 General

2.3.1.1 Support suction and discharge piping independently of the pump.

2.3.1.2 Do not use adjustable type fittings or flexible pipe fittings unless specifically FM Approved for use with fire pumps.

2.3.1.3 For locations in earthquake-prone areas, refer to Data Sheet 2-8, *Earthquake Protection for Water-Based Fire Protection Systems*, for additional suction and discharge pipe installation and bracing recommendations.

2.3.2 Suction Piping

2.3.2.1 Design and install suction piping for centrifugal pump(s) so that the pump suction pressure always remains positive over the entire range of pump flow.

2.3.2.2 When the suction pipe is larger than the pump suction flange, connect them with an eccentric, tapered reducer in such a way as to avoid air pockets. (See Figure 2.3.2.2)

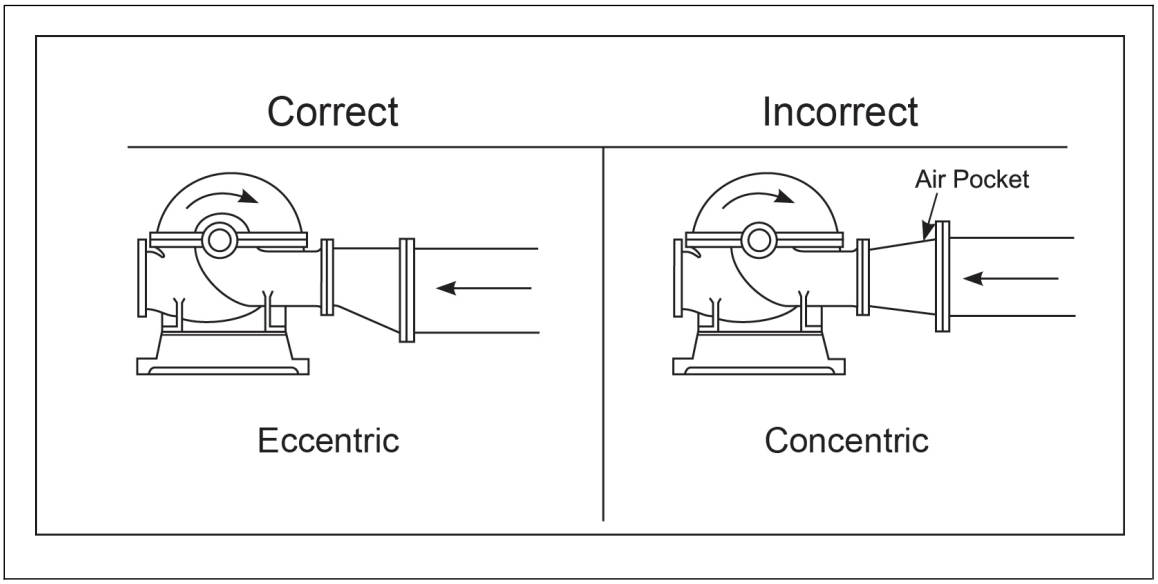

Fig. 2.3.2.2. Correct and incorrect pump suction pipe reducer

2.3.2.3 Do not install elbow and tee fittings with a centerline plane parallel to a horizontal split-case pump unless the distance between the pump suction flange and the elbow or tee is greater than 10 times the suction pipe diameter. (See Figure 2.3.2.3.)

©2026 Factory Mutual Insurance Company. All rights reserved.

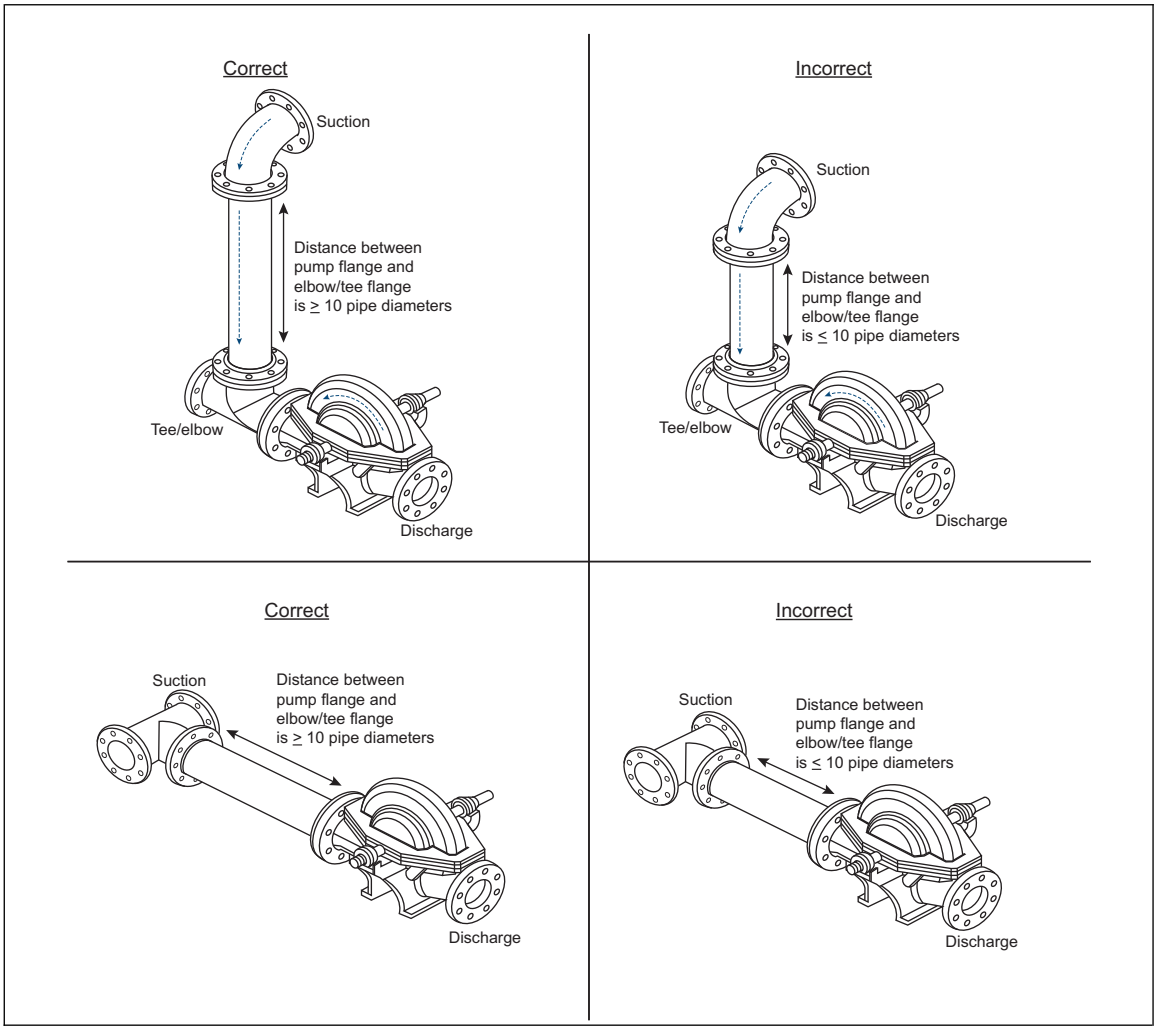

Fig. 2.3.2.3. Correct and incorrect pump suction pipe arrangements

2.3.2.4 Where the suction supply has sufficient pressure to be of some fire protection value without the pump, install a bypass line around the pump, equipped with a check valve. Size the bypass piping the same as the pump discharge pipe diameter.

2.3.2.5 Do not install a device or assembly (including but not limited to backflow preventers) that will stop, restrict starting, or restrict the discharge of a fire pump or pump driver in the suction piping.

2.3.2.6 Locate backflow preventers on the discharge side of the fire pump whenever possible due to the increased friction loss and the potential negative effect on pump performance.

2.3.2.7 Do not install low-suction pressure cut-off or regulating valves (e.g., breach valves). As a substitute, provide monitoring devices arranged to activate an alarm if the pump suction pressure or tank water level falls below a predetermined minimum.

2.3.2.8 Install only gate-type valves within the pump suction line to minimize water turbulence into the pump. Where the suction supply comes from a tank, locate the gate valve at the outlet of the tank.

2.3.2.9 When the water supply is drawn from a pond, lake, canal, river, or other open-water source, debris could clog the pump or sprinkler system:

A. Install double, removable intake screens made of corrosion resistant material such as brass, copper, Monel or stainless steel.

©2026 Factory Mutual Insurance Company. All rights reserved.

B. Provide screen mesh constructed from 1/2 in. (12.5 mm) steel mesh with a minimum No. 10 gauge (2.6 mm) wire, attached to a metal frame that slides vertically at the entrance to the intake.

C. Mount screens on a metal frame that slides vertically at the intake entrance.

D. Provide 1 in^2 (650 mm^2) of effective screen opening per gpm (3.8 L/min) at 150% of rated pump capacity.

E. Ensure total screen area is approximately 1.6 times the required net opening area.

F. Arrange screens for cleaning or repair without disturbing the suction pipe.

2.3.3 Discharge Piping

2.3.3.1 Ensure the pressure rating of the discharge piping is greater than the following:

A. The maximum pressure developed at the pump discharge and

B. The lowest-rated working pressure of any system component

2.3.3.2 Provide a means to test the fire pump installation at a minimum of 150% of the pump rated flow capacity. Where flow from multiple pumps is required to meet system demand, size the test outlets (or flow meter test return line) to accommodate all required pumps flowing simultaneously.

2.3.3.3 If an inline flow meter is installed, do not install a control valve within 10 pipe diameters of the flow meter inlet or within 5 pipe diameters of the outlet.

2.3.3.4 Do not install a flow meter in a closed loop, piped back to the pump suction piping.

2.3.3.5 Install an FM Approved anti-water-hammer device in the discharge line of the fire pump where conditions may cause damaging water hammer (e.g., larger fire protection systems).

2.3.4 Pressure Relief Valves

2.3.4.1 Avoid the use of pressure relief valves by using proper system design techniques to ensure the system will not experience pressures above the rated pressure of the system components.

2.3.4.2 For installations with very high sprinkler demand pressures, where the shutoff (churn) pressure plus the maximum static pressure can exceed the rated pressure of the system components, use one of the following options:

A. An electric motor-driven fire pump system with FM Approved variable speed controller

B. A diesel engine-driven fire pump system with FM Approved engine speed control

For options A and B, install a pressure relief valve per Sections 2.3.4.3 and 2.3.4.4.

2.3.4.3 If a relief valve is required, install an FM Approved valve between the pump and discharge check valve, discharge to a visible and safe location, avoid connections to suction piping, prevent air entrainment, and do not install shutoff valves in relief-valve piping.

2.3.4.4 If a relief valve is required, design the system to minimize the flow range over which the relief valve operates. Examples of how this can be achieved include the following:

A. Setting the pressure relief valve to operate at as high a pressure as possible

B. For diesel drivers, reducing the engine speed, per the manufacturer’s instructions. Ensure the sprinkler system demand can still be met.

©2026 Factory Mutual Insurance Company. All rights reserved.

2.3.5 Pressure Reducing Valves

2.3.5.1 Avoid the use of pressure reducing valves by using proper system design techniques to ensure the system will not experience pressures above the rated pressure of the system.

2.3.5.2 Do not install pressure reducing valves upstream of the fire pump discharge valve.

2.3.5.3 Where pressure reducing valves may be needed on a sprinkler system, see additional guidance in FM Data Sheet 3-11, *Flow and Pressure Regulating Devices for Fire Protection Service*.

2.3.6 Circulation Relief Valve

2.3.6.1 Provide a circulation relief valve on the fire pump discharge for electric-motor and radiator-cooled, diesel-engine driven fire pumps.

2.3.6.2 Provide a means to visually inspect the water discharging from the circulation relief valve.

2.4 Equipment and Processes

2.4.1 Split Case, End Suction, and In-Line Centrifugal Pumps

2.4.1.1 Do not use these pumps where a static suction lift is required.

2.4.1.2 Ensure the pump has an air-release valve having 1/2 in. (12.7 mm) minimum diameter discharged to atmosphere. End suction pumps with a top discharge, or vertically mounted split case pumps will naturally vent the air and do not require an air-release valve.

2.4.1.3 Install an inline strainer for any pump installations that require removal of the driver to clear rocks or debris from the pump impeller. Install the strainer a minimum of 10 pipe diameters from the suction flange.

2.4.2 Vertical Shaft Turbine-Type Pumps

2.4.2.1 Use a vertical shaft turbine-type pump where the water supply level is located below the discharge flange.

2.4.2.2 Ensure the pump bowl assembly is submerged below the suction source surface to a sufficient depth to meet the manufacturer’s minimum submergence requirement. The requirement must be met at the minimum water depth that includes tidal suction sources or empty tank conditions.

2.4.2.3 Do not include the water volume below the pump’s minimum submergence requirement when determining the water supply duration.

2.4.2.4 For right-angle gear drives, use an FM Approved gear drive, properly sized so both the maximum power required by the pump and the maximum thrust forces generated by the pump are less than or equal to the manufacturer’s recommendation.

2.4.2.5 For diesel-driven, vertical turbine pumps, verify a mass elastic torsional analysis of the system has been conducted to ensure no damaging stresses or critical speeds in the range of 25% above and below the operating speed of the system components. Ensure the engine, coupling, gear drive and pump were included.

2.4.3 Positive Displacement Pumps

2.4.3.1 Provide a pressure relief valve on the pump discharge capable of relieving 100% of the pump capacity. Set the pressure relief valve to relieve at or below a pressure equal to the lowest rated working pressure of any component in the system, and above the demand pressure.

2.4.3.2 Provide positive displacement pumps with an unloader valve that remains open during the pump starting sequence until the pump driver is at operating speed.

2.4.3.3 Provide a removable, cleanable suction strainer on positive displacement pumps, located at least 10 pipe diameters from the suction inlet, with a net open area at least four times the suction pipe area, manufacturer-recommended mesh size, and adequate Net Positive Suction Head (NPSH).

2.4.4 Mounting, Coupling and Alignment

2.4.4.1 Mount the pump and driver securely on a common base frame.

©2026 Factory Mutual Insurance Company. All rights reserved.

2.4.4.2 Secure the base plate to a foundation sufficiently substantial to provide rigid and permanent support for the pump, the driver and the base plate.

2.4.4.3 Grout the base frame unless it can be confirmed that grouting is not needed.

2.4.4.4 Align pumps and drivers on separately coupled pumps in accordance with the coupling and pump manufacturers' specifications. Ensure ongoing fire pump alignment in accordance with Data Sheet 2-81, *Fire Protection System Inspection, Testing and Maintenance*.

2.4.4.5 Connect the pump and driver with a rigid coupling, flexible coupling or flexible connecting shaft. Examples of rigid couplings are:

- Pin and bushing
- Jaw
- Disc
- Drive shaft with universal joints
- Steel-grid-type couplings if the drive components

2.4.4.6 Do not use all elastomeric couplings. An all-elastomeric coupling is one that relies solely on an elastomeric material for power transmission.

2.4.4.7 Direct connection or "close-coupling" of the pump and driver is acceptable for electrically driven, in-line, vertically mounted, horizontal split case, and end-suction pumps.

2.4.5 Mechanical Seals

2.4.5.1 Use only pumps equipped with mechanical seals in systems that meet the following criteria:

A. The pump is FM Approved for use with mechanical seals.

B. The suction source water is clean. Do not use pumps with mechanical seals in systems where any water source is an open body of water (e.g., retention pond, lake, or river).

C. The suction pressure is positive under all conditions of pump flow.

D. A spare split mechanical seal set is maintained on site.

E. Weekly testing of the pump is conducted.

2.4.6 Pump Sizing

2.4.6.1 Size the fire pump(s) to meet the maximum required flow and pressure demand for the fire protection system. Where multiple systems or risers are fed by the fire pump(s), design the fire pump(s) to feed the system with the greatest demand.

2.4.6.2 Provide one of the following water supply arrangements (see Section 3.0 for additional guidance):

A. Single fire pump, sized to deliver 100% of the system demand

B. Multiple fire pumps, with a level of redundancy included in the design (e.g., two pumps, each sized to deliver 100% of the system demand; three pumps, each sized to deliver 50% of the system demand)

C. For non-storage occupancies per Data Sheet 3-26, using two pumps, each sized to deliver 75% of the system demand, is acceptable.

2.4.6.3 For single or multiple fire pump installations, use a maximum of 140% of the pump rated flow capacity to meet the combined sprinkler system and hose stream demands (if also supplied by the fire pump).

2.4.6.4 Size the fire pump driver greater than or equal to the maximum peak power required by the fire pump at any point over its entire flow range. See Sections 2.5.1 and 2.6.1 for more information.

2.4.6.5 Size a pump's rated pressure based on the minimum anticipated suction pressure at the maximum required flow demand of the system. Review the daily and seasonal fluctuations in supply pressure to determine the minimum anticipated pump suction pressure.

©2026 Factory Mutual Insurance Company. All rights reserved.

2.4.7 Pump Starting, Stopping and Control

2.4.7.1 Provide a controller for each pump.

2.4.7.2 Arrange fire pumps to start automatically at a predetermined water pressure or by water flow.

2.4.7.3 Arrange fire pumps for manual stopping. Disconnect and remove any automatic stop devices.

2.4.7.4 Provide a pressure maintenance (e.g., jockey) pump, or other FM Approved equipment to maintain system pressure. Do not use the fire pump as a pressure maintenance pump.

2.4.8 Sequence Starting

2.4.8.1 Set the pumps to prevent simultaneous starting if more than one pump is required to operate to meet the system demand.

2.4.8.2 Arrange the pump starting sequence so the maximum time between pump starts is 10 seconds.

2.4.8.3 Arrange the pump starting sequence, so the failure to start one pump does not prevent subsequent pumps from starting.

2.4.9 Monitoring/Testing Systems

2.4.9.1 If an automatic weekly test timer is provided by the fire pump controller, do not rely on these to test the pump without supervision.

2.4.9.2 Arrange for appropriate personnel to respond and be in attendance for all pump-running situations, including scheduled tests, to:

A. Monitor proper operation of the pump unit during the test.

B. Identify and correct problems.

C. Ensure the unit is left in proper operating condition after the test.

2.4.9.3 Where an FM Approved automatic monitoring or testing system is installed and connected to the internet to facilitate communications and reporting, apply the following guidance:

A. The system should be deployed and operated behind the network firewall.

B. No unauthenticated services (FTP, SSL or TSL) are to be used.

C. The system should not have any open ports.

D. The system does not to have any embedded code that might allow communication, provide unauthorized access or send data to an unknown entity.

2.4.9.4 Where an FM Approved automated monitoring system is installed, at a minimum, provide the alarms as per Section 2.2.2.

See Section 3.15, Fire Pump Monitoring and Automated Testing, for additional information on Automated Monitoring Systems.

2.4.10 Run-Period Timers

2.4.10.1 Arrange the pump controller for manual stopping (See Section 2.4.7.3).

2.4.10.2 Do not set the run-period timer to “zero” as a means of converting from automatic stop to manual stop. Use the correct method for defeating the controller run-period timer, which can be found in the operation and maintenance manual of all FM Approved controllers.

2.4.11 Pressure Switches

2.4.11.1 Provide each controller with its own individual pressure-sensing line.

2.4.11.2 For pressure switches with high and low actuation settings, adjust the switch so the low adjustment setting initiates pump starting.

©2026 Factory Mutual Insurance Company. All rights reserved.

2.4.11.3 Connect the controller pressure-sensing line for each pump (including jockey pumps) between the pump's discharge check valve and the discharge control valve. Ensure the line is made of a corrosion-resistant metallic material (brass, copper, or series-300 stainless steel pipe or tube and fittings) and has a minimum internal diameter of 1/2 in. (12.7 mm) nominal size. See Figure 2.4.11.3.

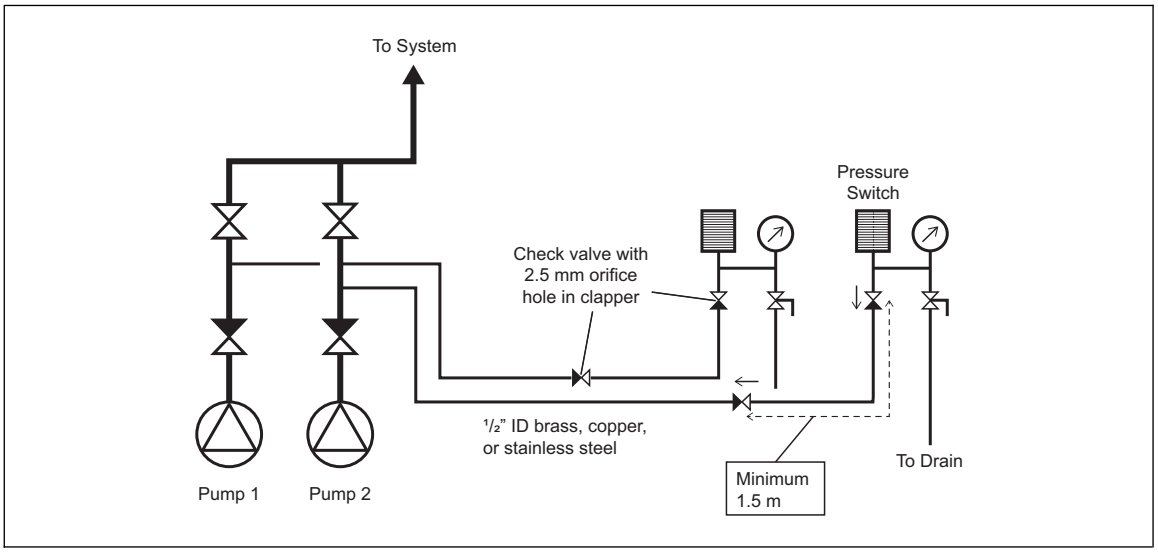

Fig. 2.4.11.3. Schematic of an acceptable pressure sensing line installation

2.4.11.4 Do not install a shutoff valve in the pressure-sensing line.

2.4.11.5 For pressure-surge dampening, install two check valves in the pressure-sensing line at least 5 ft (1.5 m) apart with a single 3/32 in. (2.4 mm) hole drilled in the check valve clapper to serve as dampening. Install the check valves with both flow arrows toward the sensing line connection at the pump discharge.

2.4.11.6 Set the start pressure of the fire pump as close as possible to the expected no flow (churn) pressure developed by the fire pump to avoid water hammer.

2.4.11.7 Arrange the fire pump system, when started by pressure drop, as follows:

A. The jockey pump starting pressure equals the pump pressure at churn (zero flow) plus the maximum static pump suction pressure plus 5 psi (0.3) bar).

B. The jockey pump stopping pressure is 10 psi (0.7 bar) more than the jockey pump start point.

C. The fire pump starting pressure is 5-10 psi (0.3-0.7 bar) less than the jockey pump start point. Use 10 psi (0.7 bar) decrements for each additional pump start.

Example:

- Pump: 1000 gpm [3,800 L/min] at 80 psi [5.5 bar] pump with churn pressure of 95 psi [6.6 bar]
- Suction Supply:
  - 50 psi [3.4 bar] from city-minimum static
  - 60 psi [4.1 bar] from city-maximum static
- Jockey pump start = 95 + 60 + 5 = 160 psi (6.6 + 4.1 = 10.6 bar)
- Jockey pump stop = 160 + 10 = 170 psi (10.6 + 0.7 = 11.3 bar)
- Fire pump start = 160 – (5-10) = 150-155 psi (10.6 – (0.3-0.7) = 10.3-9.9 bar)
- For SI units: 1 psi = 0.0689 bar.

©2026 Factory Mutual Insurance Company. All rights reserved.

2.5 Electric Driven Pumps

2.5.1 Power Supply Arrangement

2.5.1.1 General

2.5.1.1.1 Supplement unreliable power sources with a second, independent source of power, such as an emergency generator or alternate utility connection, or provide a diesel engine-driven pump.

2.5.1.1.2 Where electric fire pumps are fed from a back-up emergency generator, inspect and test the generator and any associated automatic transfer switches in accordance with Data Sheet 5-20, *Electrical Testing*.

2.5.1.2 Feeder Circuit Physical Arrangement

2.5.1.2.1 Install switchgear supplying power to a fire pump in a cutoff room so that it is not exposed to damage from an occupancy fire in the protected premises.

2.5.1.2.2 Do not install fire pump feeder cables over or through a combustible building or any building with combustible occupancy.

2.5.1.2.3 Feeder cables must be protected from fire by being buried in the ground or encased in concrete to provide a minimum of 2 hours of fire resistance.

2.5.1.2.3.1 Where routed through a building, the conductors shall be installed using one of the following methods:

A. Be encased in a minimum 2 in. (50 mm) of concrete

B. Be protected by a fire-rated assembly listed to achieve a minimum fire rating of 2 hours and dedicated to the fire pump circuit(s)

C. Be a listed electrical circuit protective system with a minimum two-hour fire rating

2.5.1.2.3.2 Fire pump feeder cables in sprinkler protected pump rooms or switchgear rooms meeting Section 2.5.1.3 are acceptable.

2.5.1.2.3.3 Protect the fire pump motor feeder cables from damage by structural failure, natural hazards, and operational accidents. For specific guidance, see Data Sheet 5-31, *Cables and Bus Bars*.

2.5.1.2.3.4 Where a secondary power supply is provided, or where two or more electrical fire pumps are installed for enhanced water supply reliability per Data Sheet 3-29, *Reliability of Fire Protection Water Supplies*, power must be supplied from independent switch rooms with feeder cables routed separately.

2.5.1.3 Feeder Circuit Electrical Arrangement

2.5.1.3.1 Arrange the power supply to the fire pump motor and its associated loads, such that disconnection of the main facility power does not interrupt power to the fire pump motor and its associated loads. Options include using a feed from a dedicated transformer or a connection from the main switchboard ahead of the facility power main disconnect (See Figures 2.5.1.3.1-1 and 2.5.1.3.1-2).

©2026 Factory Mutual Insurance Company. All rights reserved.

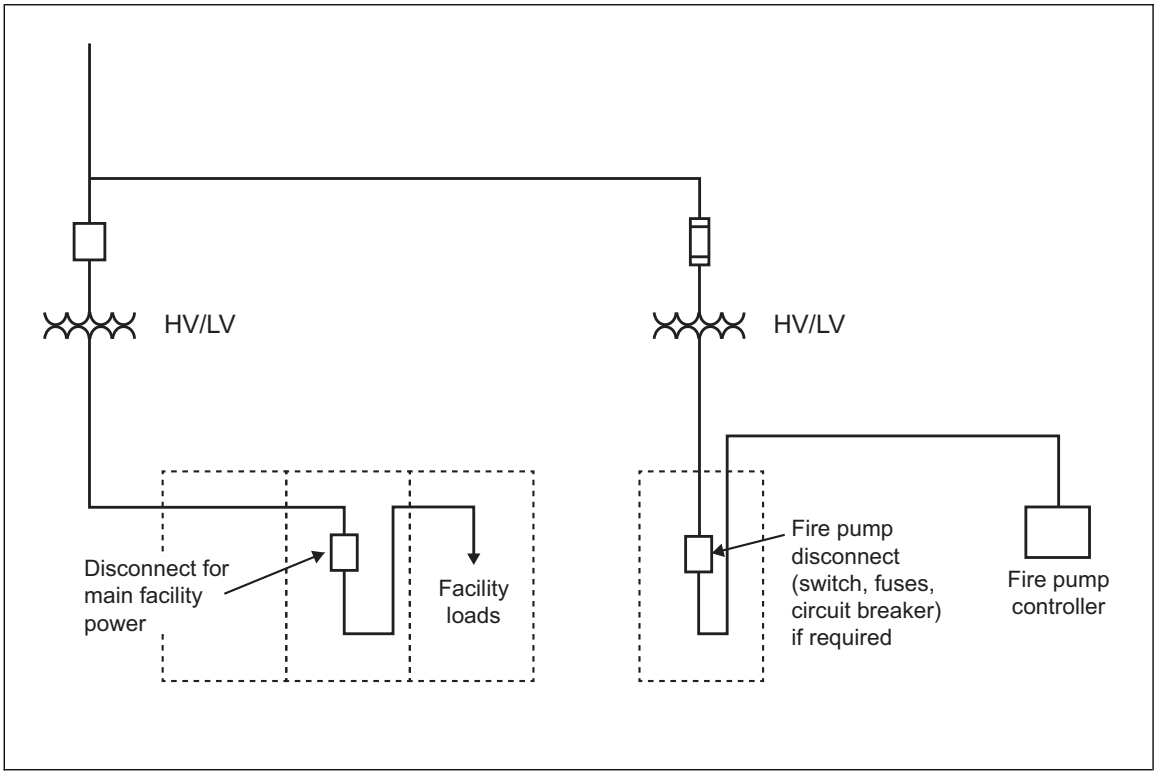

Fig. 2.5.1.3.1-1. Dedicated fire pump motor electrical feeder

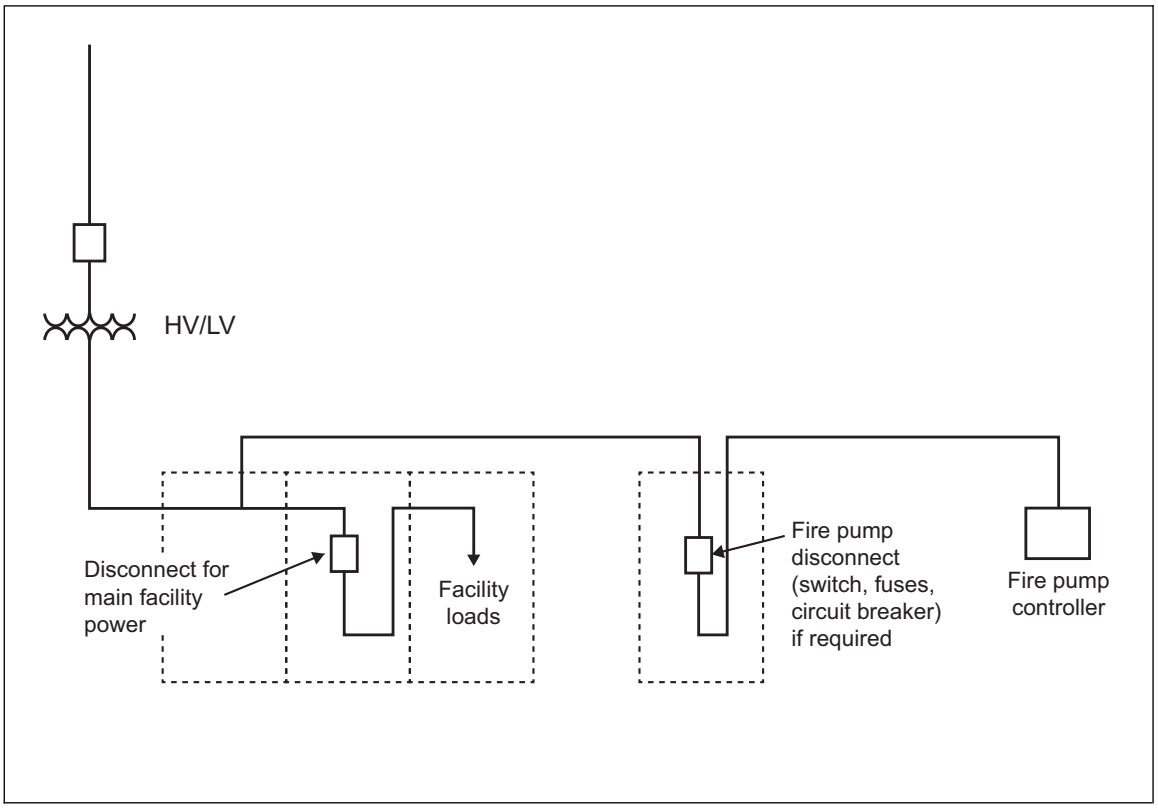

Fig. 2.5.1.3.1-2. Fire pump electrical feeder connected ahead of all other facility loads

©2026 Factory Mutual Insurance Company. All rights reserved.

2.5.1.3.2 Provide signage on any fire pump disconnect to read, “Fire Pump Disconnecting Means.”

2.5.1.3.3 Ensure circuits feeding the fire pump motor(s) and their accessories are separate from the circuits supplying other facility loads and are dedicated only to the fire pump motor and its associated loads. Other equipment such as jockey pumps, compressors for dry systems, heat tracing, and fire pump monitoring devices, etc., must be provided with their own power supply independent of the fire pump feeder circuit.

2.5.1.4 Feeder Circuit Electrical Protection

2.5.1.4.1 Size fire pump controller feeder cable conductors based on local electrical codes but, at a minimum, ensure they can carry 125% of the fire pump motor full load current.

2.5.1.4.2 Arrange the power supply so the voltage at the controller line terminals does not drop more than 15% below the controller-rated voltage during automatic motor-starting. This condition is not required when the manual emergency start feature of the controller is used; however, the power supply must provide sufficient voltage to allow for emergency manual starting. Ensure the voltage at the motor terminals does not drop more than 5% below the voltage rating of the motor when the motor is operating at 115% of the full load current rating.

2.5.1.4.3 Size the fire pump disconnects (disconnect switch, fuses, or circuit breaker), if present, it will not fail or open under locked-rotor current conditions (720% of motor full load current).

2.5.1.4.4 Ensure protection (fuses or circuit breaker) will not trip in less than 3 minutes at 300% full load current.

2.5.1.5 Ground Fault Protection

2.5.1.5.1 Do not install ground-fault protection in any portion of the circuit that supplies power to the fire pump controller.

2.5.1.5.2 Set the ground fault protection so it will not operate on motor start-up.

2.5.1.5.3 Conduct a reliability study of any fire pump circuit provided with ground fault protection.

2.5.1.5.4 Where local regulations or authorities require ground fault protection:

A. Set the ground fault protection to trip at currents above the motor-locked rotor current.

B. Provide an automatic power transfer switch and an emergency generator (or a suitable alternate source) for the fire pump.

2.5.2 Electric Motors

2.5.2.1 Electric motors for fire pump service must be FM Approved or designed in accordance with either the National Electrical Manufacturers Association (NEMA) Standard MG-1 or the International Electrotechnical Commission (IEC) Standard IEC 60034-1.

2.5.2.2 Electric motors for fire pump service require a winding insulation temperature rating of NEMA/IEC Class B 130°C (266°F) or greater.

2.5.2.3 To protect against water ingress, electric motors for fire pump service require minimum rating equivalent to a NEMA open drip-proof type or have a minimum IEC rating of IP22.

2.5.2.4 Size the motor in horsepower or kilowatts such that the maximum motor current in any phase under any anticipated condition of pump load and voltage imbalance does not exceed the motor rated full-load current multiplied by the motor service factor.

2.5.2.5 Ensure that the rated motor power provided is on a continuous (not intermittent) duty basis.

2.5.3 Electric Motor Controllers

2.5.3.1 Do not use the fire pump controller as an electrical junction box to supply power to other equipment. This includes pressure maintenance (jockey or make-up) pump(s), and room heaters.

2.5.3.2 Size the pump controller to be greater than or equal to the motor size in horsepower or kilowatts.

2.5.3.3 Do not use limited-service controllers for fire pumps supplying primary building sprinkler protection.

©2026 Factory Mutual Insurance Company. All rights reserved.

2.5.3.4 All components of the pump controller must be sized for 115% of the motor full load current. Components include the disconnect/isolating switch, short circuit protection, and (when present) circuit breaker disconnects, soft starter and power transfer switches.

2.5.3.5 Size locked rotor overcurrent protection within the controller to:

- Have a tripping time between eight and 20 seconds at 720% of motor full load current (equal to the locked rotor or the inrush current) as declared by the motor manufacturer.
- Carry 300% of motor full load current indefinitely (or at least 30 minutes for the purposes of testing/certification).

2.5.4 Variable Speed Electric Motor Controllers

2.5.4.1 In addition to the motor requirements of Section 2.5.3, use only motors that are specifically “inverter duty” rated.

2.5.4.2 Do not use the motor service factor when sizing the motor. Use only the rated power on the motor nameplate.

2.5.4.3 Ensure the variable speed pressure sensor is dedicated to the variable speed control and independent of the pressure starting switch. Do not use common pressure control for multi-pump installations.

2.5.4.4 Ensure the regulated pressure is greater than the maximum system demand pressure at the maximum required flow.

2.5.4.5 Record the regulated pressure setting and pump start pressure setting on the fire pump controller cabinet or in the fire pump room.

2.5.4.6 During pump churn (no flow) testing, ensure the motor speed is regulating the pump discharge pressure to within 5% of target pressure

2.5.4.7 Limit the cable length between the controller and the motor to 100 ft (30 m).

2.5.4.8 Do not use the fire pump controller as an electrical junction box to supply power to other equipment, including pressure maintenance (jockey or make-up) pump(s)and room heaters.

2.5.5 Power Transfer Switches

2.5.5.1 Use only combination fire pump controller and transfer switches or stand-alone fire pump power transfer switches.

2.5.5.2 Size the power transfer switch to have a power rating at least equal to the motor power or, (where rated in amperes) not less than 115% of the motor full-load current. Ensure the power transfer switch is suitable for switching the motor locked rotor current.

2.5.5.3 If an alternate power source is required for reliability, ensure the positions of the transfer switch and the alternate power source switch are remotely supervised. Provide a suitable over-current protection device for the transfer switch, if the short circuit current available from the alternate source exceeds the fire pump motor locked rotor current. Size the over-current protection device for the alternate power source to carry the fire pump motor locked rotor current plus any other pump room loads indefinitely.

2.6 Diesel Engine-Driven Pumps

2.6.1 Diesel Engine Sizing

2.6.1.1 De-rate engine power by deducting 3% from the rated engine power for diesel engines for every 1,000 ft (305 m) altitude above 300 ft (90 m).

2.6.1.2 De-rate engine power by deducting 1% from rated engine horsepower for every 10°F (5.6°C) above 77°F (25°C) maximum ambient combustion air temperature.

2.6.1.3 Limit the maximum ambient combustion air temperature to 120°F (49°C). Consider pump room temperature rise from engine heat when determining the maximum combustion air temperature.

2.6.1.4 Where right-angle gear drives are used between the vertical-turbine pump and its driver, increase the horsepower of the pump to allow for power loss in the gear drive.

©2026 Factory Mutual Insurance Company. All rights reserved.

2.6.1.5 After the above de-rating, ensure the engine de-rated power is equal to or greater than the power required to drive the pump at its rated speed under any conditions of pump load.

2.6.2 Diesel Engine Controller

2.6.2.1 Locate controllers as close as practical and within sight of the engine.

2.6.2.2 Provide remote electronic monitoring of the fire pump controller, unless constant attendance and prompt personnel response during fire emergencies can always be ensured.

2.6.2.3 Do not use the fire pump controller as an electrical junction box to supply power to other equipment, including pressure maintenance (jockey or make-up) pump(s)and room heaters.

2.6.3 Fuel, Fuel Tank and Piping

2.6.3.1 Size the fuel supply tank(s) for a minimum of eight hours of engine run time, plus 5% volume for expansion and 5% volume for sump. This size can be verified through a review of the tank manufacturer's specifications.

2.6.3.2 Store the diesel engine fuel in a steel or concrete vault style tank.

2.6.3.3 Provide a reliable means of maintaining the fuel storage tank temperature above 40°F (4°C).

2.6.3.4 Provide each fuel tank with individual fill, drain and vent connections.

2.6.3.5 Extend the fuel tank fill and vent lines outdoors.

2.6.3.6 For multi-pump installations, provide separate fuel lines and separate fuel supply tanks for each engine.

2.6.3.7 Where an electric solenoid valve is used to control the engine fuel supply, arrange it to be capable of manual operation, or manual bypass in the event of a control circuit failure.

2.6.3.8 Use only the type and grade of diesel fuel specified by the engine manufacturer. Ensure the minimum pour point and cloud point of the fuel is 30°F (-1°C) or less.

2.6.3.9 Install an FM Approved fuel maintenance system when fuel with more than 5% biodiesel is used.

2.6.3.10 Replace fuel filters every six months when fuel with more than 5% biodiesel is used.

2.6.3.11 Drain and replace biodiesel at least once per year or where contaminated biodiesel is found. The frequency of turnover will be determined by the climate and the tank location.

2.6.3.12 Reserve the fuel and fuel supply tank exclusively for use by the fire pump diesel engine.

2.6.3.13 Provide containment around indoor fuel tanks and/or leak points for diesel pumps or through wider area containment such as room perimeter. Ensure all potential leak points such as flanges and threaded connections are inside the containment.

2.6.3.14 Design the containment to hold the entire contents of the tank plus 2 in. (5 cm) of freeboard. Provide a minimum containment depth of 3 in. (7.6 cm).

2.6.3.15 Do not use glass or plastic liquid level sight tubes on the fuel storage tank.

2.6.3.16 Arrange the fuel supply line tank connection so that its relative height is higher than the engine fuel pump. Verify the engine manufacturer's fuel pump maximum static pressure is not exceeded when the level of the fuel in the tank is at maximum.

2.6.3.17 Lock any shutoff valves for the fuel piping in the wide-open position.

2.6.3.18 Provide a mechanical guard or use protected piping for all exposed fuel lines.

2.6.3.19 Provide flame-resistant, flexible fuel hoses at the engine for connection to the fuel system piping. Ensure the fuel hoses are rated for this service.

2.6.3.20 Install the fuel return line per the engine manufacturer's recommendation.

2.6.4 Ventilation

2.6.4.1 Provide room ventilation that ensures the following:

©2026 Factory Mutual Insurance Company. All rights reserved.

A. The maximum temperature under any condition is maintained at 120°F (49°C) or less when measured at the combustion air cleaner inlet.

B. Sufficient air for engine combustion

C. Removal of any hazardous vapors

D. Sufficient room air changes for radiator-cooled engines

2.6.4.2 Provide minimum ventilation openings in the pump room of 0.75 $in.^2$/Hp (4.8 cm^2/KW).

2.6.4.3 Duct cooling air from the radiator to outside the pump room through free-swinging louvers having an effective net area of at least one and one-half times the area of the radiator air outlet.

2.6.4.4 Interlock the pump room ventilation system (louvers and fans) with engine operation. Do not use a thermostat to control room ventilation. For optimum room ventilation, locate the air supply ventilator and air discharge vent on opposite walls.

2.6.4.5 Ensure normal building power is not required to open the fire pump room louvers. (Holding the louvers in the closed position with normal electrical power is preferable. If the power it cut to the building during a fire, the louvers will open automatically, supplying fresh air to the diesel engine for combustion and cooling.)

2.6.5 Batteries

2.6.5.1 Provide each engine with two separate starting battery sets and associated battery chargers.

2.6.5.2 Size each battery to have twice the capacity required to maintain the cranking speed recommended by the engine manufacturer through an “attempt to start” cycle (15 seconds cranking/15 seconds of rest, in six consecutive cycles) at a temperature of 40°F (4°C).

2.6.5.3 Ensure the batteries are sized so they can start the engine after a power failure of 90 hours.

2.6.5.4 Ensure batteries are compatible with the battery chargers in the controller. Install and maintain them in accordance with the battery manufacturer’s instructions.

2.6.5.5 Locate the batteries above the floor, secured against movement, and located where they will not be subject to excessive temperature, vibration, mechanical injury or flooding by water.

2.6.6 Engine Cooling

2.6.6.1 Heat Exchanger-Cooled Engines

2.6.6.1.1 Connect the cooling water supply piping for heat exchanger-type engine cooling systems directly to the discharge of the pump, at a point before the pump discharge check valve.

2.6.6.1.2 Use rigid metallic piping or metal reinforced flexible hose with a pressure resistance greater than two (2) times the fire pump discharge rated pressure.

2.6.6.1.3 Provide the cooling water supply piping with the following:

A. An automatic valve (not required when the pump is idle with no pressure in the discharge – e.g., vertical shaft, turbine-type pump)

B. A label showing the intended direction of flow

C. An indicating manual shutoff valve

D. A flushing-type strainer

E. A pressure regulator

F. A second indicating manual shutoff valve

G. A pressure gauge near the engine, after the last manual valve

H. A bypass line, including items B-G above

(See Figure 2.6.6.1.3.)

©2026 Factory Mutual Insurance Company. All rights reserved.

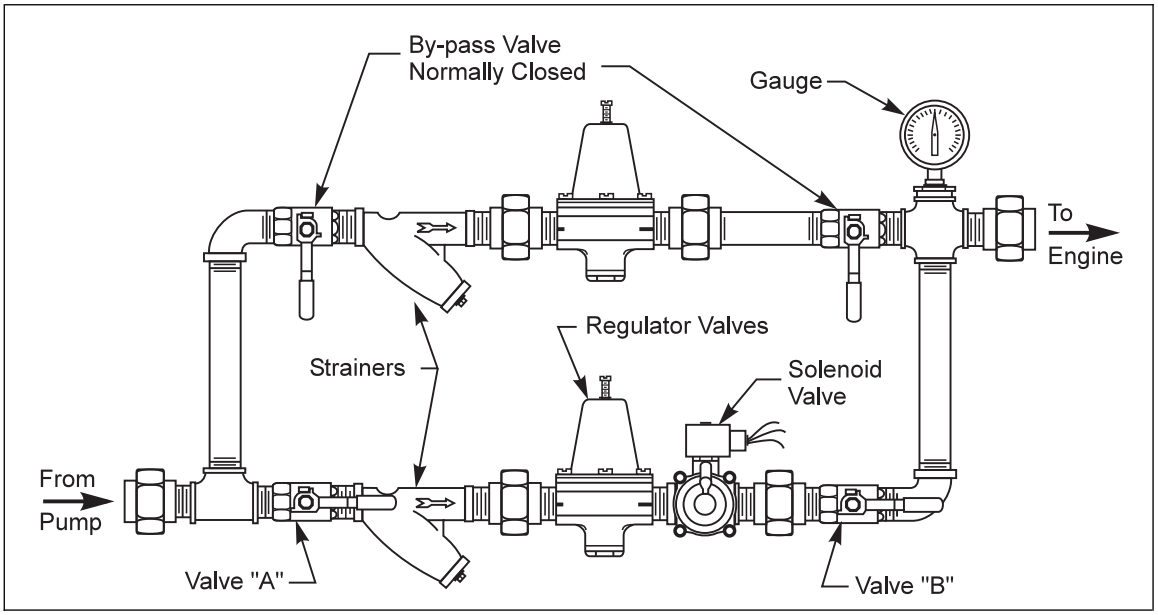

Fig. 2.6.6.1.3. Diagram of a typical heat exchanger, cooling water, piping arrangement.

2.6.6.1.4 Size the cooling water supply piping so it can flow approximately 120% of the cooling water required when the engine is operating at maximum power.

2.6.6.1.5 Ensure the regulator can supply the required cooling water flow at 65% and 140% of the pump's rated discharge pressure.

2.6.6.1.6 Provide a means to visually inspect the wastewater exiting the heat exchanger outlet.

2.6.6.2 Radiator-Cooled Engines

2.6.6.2.1 Ensure adequate air flow based on manufacturers' recommendations.

2.6.7 Diesel Engine Speed

2.6.7.1 Ensure the pump speed at rated flow is set within 50 rpm of the speed marked on the pump nameplate.

2.6.8 Variable-Speed Diesel Pumps and Pressure Limiting Drivers (PLDs)

2.6.8.1 Ensure the pressure-sensing line is a minimum of 1/2 in. (12.7 mm) nominal inside diameter. Connect the pressure-sensing line on the pump discharge piping between the pump and the discharge check valve.

2.6.8.2 Ensure the target pressure limit is greater than the maximum system demand pressure at the maximum required flow.

2.6.8.3 During pump churn testing (no flow), ensure the engine speed is regulating the pump discharge pressure to within 5% of target pressure.

2.7 Operations and Maintenance

2.7.1 Conduct a field acceptance test on all fire pumps at installation and when any of the following components are replaced, repaired or rebuilt:

A. The impeller

B. The pump casing

C. The driver (diesel or electric)

D. The controller

(See Appendix C for acceptance test procedures.)

©2026 Factory Mutual Insurance Company. All rights reserved.

3.0 SUPPORT FOR RECOMMENDATIONS

3.1 Pump Sizing

A single pump sized to meet the required system flow and pressure is sufficient for most locations. However, large or complex facilities—such as chemical plants, aircraft hangars, warehouses, wood processing plants, paper mills, or multi-building campus sites with private fire service mains—may require multiple fire pumps to provide an adequate water supply.

In these cases, pumps may have different ratings, depending on the client's fire protection goals. When multiple pumps are used, each must be sized based on the highest flow and pressure demand of any single riser in the system.

For storage and high-hazard occupancies, the design goal is typically N+1 redundancy, ensuring adequate water supply even when one pump is out of service for inspection, testing or maintenance. Example configurations include:

- Two pumps, each at 75% of total demand (typically for non-storage, non-high-hazard occupancies)
- Three pumps, each at 50% of total demand
- Four pumps, each at 37.5% of total demand
- Five pumps, each at 25% of total demand
- For systems with more pumps, include one additional pump at the same percentage to maintain N+1 redundancy

N+1 redundancy means designing a system with enough capacity to meet full demand even if one component is unavailable. N+1 redundancy ensures the system can continue to meet required flow and pressure even with one pump offline.

In fire protection design, N+1 isn't just good practice, it is often essential for ensuring the system is always capable of delivering the required water supply under any single failure condition.

3.2 Construction and Location

Penetrations through pump room fire walls should be sealed using mineral wool or other FM Approved firestop materials, secured with pipe collars on both sides of the wall.

Pipes passing through foundation or pit walls below grade must be sealed watertight. Openings around these pipes in pump room walls or floors can be filled with asphalt mastic or other suitable sealing materials.

For vertical shaft turbine pumps, provide a removable roof panel in the pump house to allow for pump removal during inspection or maintenance.

3.3 High-Rise Buildings

Fire pumps can supply automatic sprinkler systems, standpipe and hose systems, or combined systems that include both sprinklers and fire service hose outlets.

In vertical series staging, pumps are arranged in sequence by building zone:

- The first (lowest) pump supplies the first zone and feeds the suction of the second pump.
- The second pump supplies the second zone and feeds the suction of the third pump.
- This pattern continues for higher zones.

In a multi-zone building, a fire on the upper floor requires all upstream pumps to start. If any pump fails to start, water will not reach the higher zones.

3.4 Pump Suction and Discharge Piping

Turbulence at the fire pump suction must be minimized, as it can reduce pump performance. A straight pipe length of 10 pipe diameters upstream of the pump is a common industry guideline, but it is only adequate if all required flow and pressure conditions are met.

©2026 Factory Mutual Insurance Company. All rights reserved.

When a fire pump is supplied from a water supply shared with the process water supply system, confirm that operating the pump at 150% of its rated capacity will not cause unsafe process conditions due to reduced water pressure.

Butterfly valves in suction piping can negatively affect pump performance for several reasons:

- They introduce turbulence that can decrease pump performance.
- They increase the potential for partial flow obstruction.
- The valv disc inherently disrupts smooth, laminar flow into the pump.

In closed-loop systems, a nearly-closed suction valve may not be easily detected, creating a risk of restricted flow to the pump.

3.5 Other Pumps Used for Fire Protection

Limited-service fire pumps are compact, low-cost units that deliver at least 130% of rated flow at no less than 65% of rated head. They are limited to 30 hp maximum and use across-the-line electric motor starting only. These pumps are intended for installations where a full-service fire pump is impractical, such as day-care centers, nursing homes, mixed-use residential/commercial buildings and small apartment complexes. They require a dedicated, limited-service controller and should not be confused with jockey pumps.

Limited-service controllers are a lower-cost alternative to standard fire pump controllers. Key differences include:

- Use of a thermo-magnetic circuit breaker instead of more robust protection
- No built-in isolating switch, requiring an upstream disconnect and/or overcurrent protection (fuses or circuit breaker)

Thermo-magnetic breakers are influenced by ambient temperature and retain a thermal memory after tripping, meaning they must cool down before returning to their original trip threshold.

3.6 Vertical Shaft Turbine-Type Pumps

Vertical shaft turbine pumps are well suited for fire protection applications under the following conditions:

- When the water source is below ground level
- When installing another pump type below the minimum water level is impractical
- When drawing from open water sources with fluctuating surface levels
- When an automatically controlled pump is needed, and a horizontal pump would otherwise require suction lift

These characteristics make them ideal for challenging water supply conditions where maintaining reliable suction is critical.

3.7 Positive Displacement Pumps

Positive displacement pumps are commonly used to move water (e.g., for water mist systems) or foam concentrates. Consider liquid viscosity during pump selection.

Unlike centrifugal pumps, these pumps can exceed their maximum discharge pressure if they operate against a closed system. To prevent over-pressurization, a relief valve is required.

An unloader valve is also necessary to allow the pump driver to reach rated speed before taking on load. This valve is especially important for diesel-driven pumps, as the high torque demand at startup can otherwise stall the engine.

3.8 Mounting, Coupling and Alignment

A substantial, reinforced concrete foundation is essential to maintain proper alignment of the pump and driver.

©2026 Factory Mutual Insurance Company. All rights reserved.

Initial alignment should follow the guidance in Data Sheet 2-81. Once correct, secure the baseplate to the foundation with anchor bolts and grout. Alignment must then be checked and adjusted, if needed, at several stages:

- After the grout has cured
- After the piping is connected
- After verifying correct driver rotation
- After initial operation, once temperatures stabilize
- After approximately 10 hours of operation

Before startup, reconnect the coupling, prime the pump, and operate under normal conditions until temperatures stabilize. Shut down and recheck the alignment.

If alignment remains correct after final checks, dowel the pump and driver to the baseplate.

Common causes of misalignment include:

- Foundation settling or movement
- Pipe stress affecting the pump
- Bearing wear
- Thermal distortion of the baseplate
- Structural movement of the building

Some realignment may be required periodically, especially while the pump and foundation are new.

3.9 Mechanical Seals

Mechanical shaft seals are an alternative to traditional soft packing at the point where the pump shaft exits the casing. Mechanical seals typically do not leak, while soft packing allows some leakage but is widely available and easy to replace.

However, mechanical seals can be more sensitive to failure. They may be damaged by contaminants in the water supply or fail due to adhesion of the seal faces after long periods of inactivity, potentially resulting in sudden loss of sealing.

3.10 Pressure Relief Valves

3.10.1 System Design Considerations

Proper system design can often eliminate the need for pressure relief valves by preventing excessive pressure.

A well-designed system ensures that the pump shutoff (churn) pressure plus static suction pressure does not exceed the pressure rating of downstream components. This design is typically achievable for pumps supplied from tanks or wet pits.

For booster pumps connected to public water supplies, this design can usually be accomplished by:

- Properly sizing the piping to minimize friction loss
- Selecting a pump whose performance curve closely matches system requirements without producing excessive churn pressure

Designs that rely on undersized piping and pressure relief valves to limit excess pressure should be avoided.

3.10.2 Example

If system components are rated for 175 psi (12 bar):

- Select a pump with a churn pressure of 150 psi (10 bar) or less (based on the manufacturer’s adjusted curve).

©2026 Factory Mutual Insurance Company. All rights reserved.

- Allow for:
  − 10 psi (0.7 bar) from tank suction pressure
  − At least 15 psi (1.0 bar) above churn for jockey pump operation

This arrangement keeps total system pressure within acceptable limits, eliminating the need for a relief valve.

3.10.3 When Relief Valves are Necessary

If suction pressure varies (e.g., booster pumps on public supply), pumps are typically sized based on minimum expected suction pressure to ensure adequate performance. However, higher-than-expected suction pressures may cause system pressures to exceed component ratings.

In such cases, a pressure relief valve is required to prevent exceeding the pressure ratings of system components. Where pressure relief valves are needed, they should be selected based on the following order of preference:

- Pilot-operated type
- With the sensing line connected to the pump discharge downstream of the check valve on the pump discharge

3.11 Variable Speed Pumps

Variable speed pumps add complexity and increase testing and maintenance requirements, so they should be avoided when simpler design solutions are feasible. However, they can be effective in managing excess system pressure when other options are not practical.

Typical applications include:

- Systems with wide variations in suction pressure
- High-rise buildings, where these pumps can reduce or eliminate the need for pressure-reducing valves
- Tall buildings with suppression-mode systems that require high end-head pressures

3.12 Pump Starting, Stopping and Control

For systems supplying special water control equipment (such as deluge or dry-pipe valves), the fire pump should be arranged to start before pressure-actuated switches operate. This arrangement helps reduce the risk of water hammer.

3.12.1 Purpose of Manual Pump Stopping

Manual stopping ensures safe and reliable operation by:

- Requiring personnel presence to verify proper pump operation after startup
- Confirming that the cause of pump operation or fire event has been resolved before shutdown
- Continuously running the pump during firefighting, since frequent cycling can disrupt hose stream performance

3.12.2 Role of the Jockey Pump

Maintaining system pressure under normal conditions is the function of the jockey (pressure maintenance) pump, not the fire pump.

3.12.3 Fire Pump Startup Considerations

A fire pump must start promptly when:

- A dry pipe, pre-action or deluge system activates, or
- Sprinklers operate in a wet pipe system

Large differences between pump start pressure and discharge pressure can cause damaging water hammer. This risk can be increased by:

©2026 Factory Mutual Insurance Company. All rights reserved.

- Poor pressure coordination within the system
- Simultaneous starting of multiple pumps, which may also overload electrical systems (e.g., tripping upstream overcurrent devices for electric motor-driven pumps)

Proper sequencing and pressure control are essential to minimize these risks.

3.13 Electric Motor-Driven Pumps

A reliable electrical supply for fire protection equipment:

- Is protected from damage caused by fire, explosions or plant operations
- Is isolated from non-fire protection equipment, avoiding electrical or mechanical issues from other connected systems
- Prevents unintended disconnection by plant personnel, the fire department or others during a fire event

These characteristics help ensure continuous operation during emergencies.

3.14 Diesel Engine-Driven Pumps

3.14.1 Diesel Fuel Storage and Biofuels

Diesel fuel tanks for fire pump engines are typically installed within the pump room or pump house, with fill and vent connections extended outdoors. This arrangement supports reliable fuel transfer and helps prevent freezing in cold environments.

Where practical, the fill pipe may also be used as a gauge well for checking fuel levels.

Biofuels are increasingly used in diesel applications and are commonly derived from renewable feedstocks. The most common types include:

- FAME (Fatty Acid Methyl Ester) – first-generation biodiesel
- HVO (Hydrotreated Vegetable Oil) – second-generation renewable diesel

These fuels are often blended with petroleum diesel in varying proportions, such as:

- B5 (5% biofuel)
- B20 (20% biofuel)
- B100 (100% biofuel)

Biofuel blends may introduce differences in storage stability, cold-weather performance and maintenance considerations.

Detailed requirements for fuel storage, handling and maintenance, including biodiesel limitations, are provided in Section 2.6.3.

3.14.2 Engine Cooling Systems (General)

Diesel fire pump engines require continuous cooling to maintain safe operating temperatures under all load conditions. Cooling systems generally fall into two categories:

- Heat exchanger–cooled systems
- Radiator-cooled systems

In both cases, the cooling system is designed to remove heat from the engine coolant and maintain temperature within the manufacturer’s limits.

Additional components such as oil coolers or intake manifolds may also be cooled, depending on the engine design.

The specific configuration, sizing and required components of cooling systems are provided in Section 2.6.6.

©2026 Factory Mutual Insurance Company. All rights reserved.

3.14.3 Heat-Exchanger–Cooled Engines

Heat exchanger–cooled engines use water, typically sourced from the fire pump discharge, to remove heat from the engine coolant through a heat exchanger.

Key characteristics of these systems include:

- Cooling water is circulated through the heat exchanger while engine coolant is circulated internally by an engine-driven pump
- Temperature is regulated by a thermostat within the engine cooling circuit
- Proper operation depends on adequate flow, pressure control and clean water supply
- Discharge from the cooling system is typically observable, providing a simple means of confirming operation

Heat exchanger systems rely on a combination of piping components, control devices and instrumentation to ensure reliable operation under varying pressure conditions.

Detailed piping arrangements, component requirements and performance criteria are provided in Section 2.6.6.1.

3.14.4 Radiator Cooling

Radiator-cooled engines dissipate heat directly to the surrounding air. Therefore, they require a sufficient and continuous supply of ventilation air. Key considerations for radiator-cooled engines include:

- High airflow is required to remove heat from the radiator
- Airflow must be properly directed to prevent recirculation of hot air
- In some configurations, warm discharge air may be redirected within the space to reduce heating demand, provided it does not impair cooling performance

Adequate room ventilation is critical for both engine combustion and heat removal.

Ventilation design criteria and airflow requirements are provided in Section 2.6.4 and Section 2.6.6.2.

3.14.5 Engine Governor and Speed Behavior

The engine governor controls engine speed in response to load changes. As load increases from no-load (churn) to full load, a reduction in engine speed—known as governor droop—typically occurs.

This effect is present in both mechanical and electronic governors, although it is generally less pronounced in modern electronic systems. Governor settings may allow limited adjustment of droop characteristics.

Not all reductions in engine speed are caused by governor behavior. Other factors that may contribute include:

- Restricted air intake (e.g., clogged filters)
- Engine wear (e.g., valves or piston rings)
- Fuel system deficiencies

A gradual or unexpected decline in speed under constant load conditions may indicate an abnormal condition requiring investigation.

Acceptable speed ranges and performance requirements are provided in Section 2.6.7.

3.14.6 Variable-Speed Diesel Pumps

Variable-speed diesel fire pump systems are designed to automatically adjust engine speed to control discharge pressure under varying operating conditions.

These systems typically use a pressure-sensing connection from the pump discharge to modulate engine speed independently of the primary fire pump controller. This connection allows the system to reduce excessive pressures, particularly during low-flow conditions such as churn.

©2026 Factory Mutual Insurance Company. All rights reserved.

In some configurations, the pressure-sensing feature can be isolated or bypassed for testing or maintenance purposes.

Design requirements, sensing line configuration and pressure control criteria are provided in Section 2.6.8.

3.15 Fire Pump Monitoring and Automated Testing

A fire pump monitoring system continuously tracks system conditions to identify faults, analyze performance trends, and generate alarms that alert personnel to investigate and perform repairs.

An automated fire pump testing system performs scheduled churn (no-flow) tests, monitors performance and detects abnormal conditions. If a system demand or upset occurs during testing, the system automatically terminates the test and restores full fire protection without interruption.

Remote monitoring and testing systems have become more common in recent years. While adoption in codes and standards has lagged, acceptance is increasing. These systems are approved for use with diesel- and electric-driven fire pumps and can satisfy routine inspection and testing requirements when their usage is limited to monitoring and no-flow testing.

3.15.1 System Functions

Fire pump monitoring and testing systems perform the following functions:

- Monitoring systems collect and analyze data during standby and operation to detect adverse conditions.
- Automated testing systems initiate and evaluate churn tests, identifying abnormal performance during operation.
- In an emergency, testing stops immediately to ensure uninterrupted fire protection.

3.15.2 Operating Requirements

Follow the operating requirements below for fire pump monitoring and testing systems:

- Personnel must be present whenever the pump operates, including routine tests, unless an FM Approved automated testing system is installed.
- Automatic stopping is permitted during programmed tests only when no active demand exists (e.g., normal pressure conditions).
- Minimum run timers in controllers must be disabled, allowing manual shutdown, unless the pump is running due to a programmed test.

3.15.3 Limitations of Basic Test Timers

Some automatic weekly test timers can stop a test and allow water flow during an emergency. However, these systems lack the full functionality of FM Approved automated testing systems and are treated only as automatic run timers, not as equivalent monitoring and testing solutions.

4.0 REFERENCES

4.1 FM

Data Sheet 1-40, *Flood*
Data Sheet 2-0, *Installation Guidelines for Automatic Sprinklers*
Data Sheet 2-8, *Earthquake Protection for Water-Based Fire Protection Systems*
Data Sheet 2-81, *Fire Protection System Inspection, Testing and Maintenance*
Data Sheet 3-2, *Water Tanks for Fire Protection*
Data Sheet 3-11, *Flow and Pressure Regulating Devices for Fire Protection Service*
Data Sheet 3-29, *Reliability of Fire Protection Water Supplies*
Data Sheet 5-23, *Design and Protection for Emergency and Standby Power Systems*
Data Sheet 5-31, *Cables and Bus Bars*

©2026 Factory Mutual Insurance Company. All rights reserved.

4.2 NFPA

National Fire Protection Association (NFPA). NFPA 25, *Standard for the Inspection, Testing and Maintenance of Water-Based Fire Protection Systems*

4.3 Other

British Standards Institute (BSI). *Fixed Firefighting Systems: Automatic Sprinkler Systems Design, Installation and Maintenance*. EN 12845:2015.

British Standards Institute (BSI). EN17451.

Hydraulic Institute (HI). *Various standards for centrifugal, rotary, and reciprocating pumps*.

National Electrical Manufacturers Association (NEMA). *Motors and Generators*. NEMA MG 1: 2006.

International Electrotechnical Commission (IEC) Standard IEC 60034-1.
International Electrotechnical Commission (IEC) Standard IEC 62091.

VdS Schadenverhütung GmbH. *VdS CEA Guidelines for Sprinkler Systems: Planning and Installation*. VdS CEA 4001: 2005-09.

APPENDIX A GLOSSARY OF TERMS

Automatic control: Control of an operation without human intervention.

Automated fire pump testing system: An automated fire pump testing system automatically initiates the periodic churn (no flow) test and monitors the pump performance during the test. The system is designed to detect upsets (or operation of the protection systems), terminate testing to prevent interruption of water flow to the protection systems, and initiate an alarm.

Automatic transfer switch (ATS): Self-acting equipment for transferring electrical power from a normal power source to an emergency or standby power source.

Branch circuit: The circuit conductors between the final overcurrent device protecting the circuit and the utilization equipment.

Break tank: A fire protection water tank that is not sufficient in size for the full fire protection demand. It utilizes automatic replenishment to achieve fire protection system adequacy.

Cavitation: A reduction of pressure within a pump that causes water vaporization and/or air entrainment. Cavitation reduces a pump's performance and can damage the pump impeller.

Circulation relief valve: A valve on a fire pump, designed to discharge a small amount of water to prevent overheating of the pump during shutoff conditions.

Diesel engine: An internal combustion engine in which the diesel fuel is ignited entirely by the heat resulting from the compression of the air supplied for combustion.

Diesel engine fire pump controller: Fire pump controller intended to control a diesel engine-driven fire pump.

Driver: The electric motor or diesel engine that drives the fire pump.

Electric fire pump controller: Fire pump controller intended to control an electric motor-driven fire pump.

Feeder (fire pump): The electrical conductors between the transformer and the fire pump controller.

Fire pump: A pump dedicated to deliver a specified rate of water flow (gpm [L/min]) at a specified pressure (psi [bar]) to a fire protection system.

Fire pump controller: An enclosed group of devices that serve to govern, in a predetermined manner, the starting and stopping of the fire pump driver, as well as monitor and signal the status and condition of the fire pump package.

Fire pump monitoring system (automated): This system continuously monitors the entire fire pump system to detect system trouble conditions, develop performance trends and initiate appropriate signals or alarms for the purpose of summoning qualified personnel to investigate and initiate repairs.

©2026 Factory Mutual Insurance Company. All rights reserved.

Fire pump package: An assembled unit consisting of a fire pump, driver, controller and accessories.

Flexible coupling: A device used to connect a driver to a pump; it can compensate for small misalignments and dampen vibration.

Foam pump controller: A special electric or diesel engine fire pump controller intended for the unique requirements of foam concentrate fire protection pumps.

Full-Load Current (FLA): Full-Load Current represents the maximum current drawn by a motor when it is operating at its rated capacity. This occurs when the motor is delivering its designed torque and power output. The FLA can be calculated using the following formula:

$$FLA\ (A) = P/(V \times \eta)$$

Where:
P = motor power (W)
V = voltage of the AC supply (V)
η = efficiency of the motor (%)

Full voltage or reduced voltage starting: Electric motor controllers may be configured for direct on-line starting (full voltage) or for reduced motor starting current (reduced voltage).

High-rise building: Any building with an occupied floor located more than 75 ft (23 m) above the lowest level of fire service vehicle access, not including:

- Airport traffic control towers
- Open parking garages
- Amusement park structures
- Bleachers
- Grandstands
- Stadiums
- Special industrial buildings (i.e., BLRB)
- Buildings with high hazard occupancies

Inverter duty: Inverter-duty motors are three-phase, electric motors, specifically engineered for use with Variable Frequency Drives (VFDs) to handle variable speed operations, high voltage spikes and thermal management at low speeds. They feature robust insulation (Class F or H), superior cooling and often handle wide, constant torque speed ranges.

Locked-Rotor Current (LRA): Locked-Rotor Current (LRA) is the maximum current drawn by a motor when it is stalled or locked in place, typically during startup or fault conditions. This phenomenon is characterized by a significant increase in current due to the motor's inability to rotate and generate torque. The LRA can be calculated using the following formula:

$$LRA\ (A) = \sqrt{((2 \times P \times f \times 1.732)/(V \times \eta))}$$

Where:
P = motor power (W)
f = frequency of the AC supply (Hz)
V = voltage of the AC supply (V)
η = efficiency of the motor (%)

Mass elastic torsional analysis: An engineering analysis conducted for the purpose of identifying and eliminating damaging torsional forces and linear resonant frequencies from the operating speed range of rotating equipment.

Maximum working pressure: The highest pressure developed at the pump discharge flange under any anticipated condition of suction pressure and pump flow.

Mechanical seals: A device that forms a seal between the pump shaft and stationary components. It may be used in place of compression (soft) packing. The primary seal is achieved by two very flat, lapped faces perpendicular to the shaft The rubbing contact between these two flat mating surfaces minimizes leakage.

©2026 Factory Mutual Insurance Company. All rights reserved.

One face is held stationary in a housing. The other face is fixed to, and rotates with, the shaft. Dissimilar materials are often used for the stationary insert and the rotating seal ring face to prevent adhesion of the two faces.

Multiple stage pumps: Horizontal, split-case, centrifugal fire pumps with more than one impeller on the same shaft. The number of stages is determined by the number of impellers.

Net positive suction head (NPSH): The minimum pump suction pressure needed to prevent vaporization of the water (cavitation) in the pump.

Positive displacement pumps: A pump that produces flow by capturing a specific volume of fluid per pump revolution and reduces the fluid void by mechanical means to displace the pumping fluid.

Pressure reducing valve: A valve in a fire protection system that is designed to limit down-stream water pressure under both flowing and non-flowing (static) conditions.

Rated pump capacity: Flow capacity (gpm [L/min]), at rated pressure (psi [bar]) and pump rotational speed (rpm).

Rated pressure: Pressure in pounds per square inch (psi [bar]), developed by the pump when operating at rated capacity (gpm [L/min]).

Reliable electric power source: A reliable power source has infrequent power disruptions from environmental or man-made conditions. An electric power source that has disruptions lasting longer than eight hours, three or more times in a 12-month period is considered unreliable. More frequent short-term outages would also be considered unreliable.

Relief valve (main): A valve near the discharge of a fire pump, used to limit the pressure being fed into the fire protection system under abnormal conditions (e.g., a runaway diesel engine).

Service factor: A multiplier that, when applied to the rated horsepower of an A/C motor, indicates a permissible horsepower loading that can be carried at the rated voltage, frequency and temperature. The service factor multiplier (e.g., 1.15) indicates that the motor is permitted to be overloaded 1.15 times the rated horsepower without insulation breakdown or otherwise significantly reducing service life.

Shutoff or churn pressure: The net pressure in psi (bar) developed by the pump at rated speed with zero flow.

Single-stage pump: A pump in which the total head is developed by one impeller.

Stuffing box packing: The function of packing is to control leakage at the pump shaft, but not to eliminate it completely. It typically consists of rings of packing, a lantern ring for the injection of a lubricating and/or flushing liquid, and a gland to hold the packing and maintain the desired compression for a proper seal. The packing is lubricated by the pumped water. The lantern ring is supplied for situations where the stuffing box pressure is below atmospheric pressure. It injects lubrication into the stuffing box using a bypass line from the pump discharge to the lantern ring connection.

Suction pit: A defined area, enclosed by open grates and screens, that is filled from an open body of water such as a pond, river or reservoir and used as a fire pump suction source.

Total discharge head: The gauge reading in psi (bar) at the discharge flange of the pump, referenced to the pump centerline, plus the velocity head at the point of gauge attachment.

Total suction head: The condition when the suction pressure is above atmospheric. The total suction head is the algebraic sum of the gauge reading in psi (bar) at the pump suction nozzle flange, referenced to the pump centerline, and the velocity head at the point of gauge attachment. Also called “positive suction pressure.”

Total suction lift: The condition when suction pressure is below atmospheric. The total suction lift is the algebraic sum of the gauge reading in psi (bar) at the suction nozzle flange of the pump, referenced to the pump centerline, and the velocity head at the point of gauge attachment.

Total head: The algebraic difference between the total discharge head and the total suction head. Where suction head exists, total head equals total discharge head minus total suction head. Where suction lift exists, total head equals total discharge head plus total suction lift.

©2026 Factory Mutual Insurance Company. All rights reserved.

Variable-speed, pressure-limiting control: A variable frequency drive within the fire pump controller, or on the pump motor itself, used to reduce the incoming power line frequency (60 or 50 Hz) to slow the speed of the motor if the set pressure limit is exceeded. Used for variable-speed, electric motor-driven pumps.

Variable-speed pressure-limiting control: A control system for limiting the discharge pressure produced by a fire pump by reducing the pump driver speed.

APPENDIX B DOCUMENT REVISION HISTORY

The purpose of this appendix is to capture the changes that were made to this document each time it was published. Please note that section numbers refer specifically to those in the version published on the date shown (i.e., the section numbers are not always the same from version to version).

October 2026. This data sheet has been fully revised. Significant changes include:

A. Added new guidance on FM Approved remote pump monitoring and testing systems.

B. Clarified guidance for the use of multiple pumps of differing sizes.

C. Expanded guidance in Appendix C on acceptance testing of fire pumps to include starting the pump from emergency power systems (generators, etc.).

D. Clarified the need for pressure relief valves when using diesel-driven, variable-speed pumps.

E. Updated the guidance for the use of biofuels in fire pumps to align with industry guidance on the use of these fuels in diesel-driven fire pumps.

F. Updated guidance for setting the diesel engine speed to align with the guidance in FM 1333, *Examination Standard for Diesel Engine Fire Pump Drivers*.

G. Made editorial updates to ensure consistency with other FM data sheets.

April 2025. Interim revision. Minor editorial changes were made.

October 2021. Interim revision. Significant changes include the following:

A. Added new guidance for use of multiple fire pumps running simultaneously at reduced capacity to provide the total water supply for a fire protection system.

B. Updated guidance to be consistent with Data Sheet 3-11, *Flow and Pressure Regulating Devices for Fire Protection Service*.

C. Updated inspection, testing, and maintenance guidance to align with Data Sheet 2-81, *Fire Protection System Inspection, Testing, and Maintenance*.

D. Updated guidance on power supplies for electric drivers of fire pumps.

E. Updated feeder cable guidance to ensure consistency with Data Sheet 5-31, *Cables and Bus Bars*.

F. Updated water supply reliability guidance to ensure consistency with Data Sheet 3-29, *Reliability of Fire Protection Water Supplies*.

G. Reformatted this data sheet to ensure consistency with other FM data sheets.

April 2012. Terminology related to ignitable liquids has been revised to provide increased clarity and consistency with regard to FM ’s loss prevention recommendations for ignitable liquid hazards.

July 2011. Minor editorial changes were made for this revision.

September 2010. Minor editorial changes were made for this revision.

May 2010. Replaced all references to Data Sheet 2-8N, *Installation of Sprinkler Systems* (NFPA) with references to Data Sheet 2-0, *Installation Guidelines for Automatic Sprinklers*.

June 2009. Clarification was made to recommendation 2.8.4.10.

May 2008. Clarification was made to recommendation 2.3.3.2.

April 2008. Data Sheet 3-7 is new and supercedes Data Sheet 3-7N. The revision history of Data Sheet 3-7N can be found in the 2001 version of 3-7N.

©2026 Factory Mutual Insurance Company. All rights reserved.

December 2007. The following changes were made:

1. The data sheet number and title has been changed.
2. The data sheet has been completely rewritten.
3. Information on the use of variable speed pumps has been added.
4. Information on the use of mechanical seal pumps has been added.
5. Information on the use of positive displacement pumps has been added.
6. Information on steam turbine fire pumps has been retired.
7. High rise building pump installation requirements clarified.
8. New electrical feeder arrangement figures have been added.

APPENDIX C ACCEPTANCE TESTING

The guidelines for water supply testing outlined in Data Sheet 3-0, *Hydraulics of Fire Protection Systems*, are to be followed in addition to those found in this standard.

Prior to starting the pump, ensure the operator is familiar with the operation of this type of equipment. Ensure the instruction manuals issued by the engine, pump and controller manufacturers are studied by all operators.

The following equipment is needed for testing:

A. **Test valve header:** Fifty-foot (15 m) lengths of 2 1/2-in. (65 mm) lined hose with smooth bore nozzles (Underwriters' play pipes), or hose monster devices, as needed to flow the required volume of water. (Where a calibrated and reliable in-line test flow meter is provided, the equipment detailed above may not be needed. Calibration of the flow meter must be within the previous 12 months to be acceptable.)

B. Use test instruments of high quality that are accurate and in good condition.

- Clamp on volt/ammeter
- Test gauges
- Tachometer
- Pitot tube with gauge (for use with hose and nozzle)

C. Ensure that all test instrumentation has been calibrated within the last 12 months.

Align the coupled driver and coupling once the coupled pump and driver have been successfully installed on the secure foundation and before the pump is commissioned or placed into service. Conduct a field acceptance test on all fire pumps upon installation. Obtain a copy of the manufacturer's certified pump test characteristic curve for comparison to the results of the field acceptance test. The fire pump flow results are to be equal to or better (as installed) than the pump performance indicated on the manufacturer's certified shop test curve, within the accuracy of the test equipment. If this is not the case, investigate the cause of the discrepancy; and correct it.

Conduct operational testing of the pump when replacing individual components to ensure the components will perform correctly. For example, use flowing water to verify the integrity of a seal, or conduct a flow test to verify the alignment of the coupling.

Ensure the fire pump performs at minimum, rated and peak loads without overheating or damaging any component.

Ensure vibrations of the fire pump assembly do not cause damage to any fire pump component.

C.1 Flow Tests

Where a hose valve header is used, limit each hose length to approximately 100 ft (30 m).

Where a flow test meter is used, provide additional outlets such as hydrants, hose valves, etc., to verify the accuracy of the metering device.

Test the flow meter for accuracy before the pump acceptance test to ensure it is installed correctly.

©2026 Factory Mutual Insurance Company. All rights reserved.

C.1.1 Field Acceptance Test Procedure

A. Make a visual check of the fire pump package. Verify the proper setting of pressure switches and circuit breakers. Check for signs of overheating and excessive vibration. If hose and nozzles are used, ensure they are securely tied down. Ensure the hose valves are closed. If a flow meter is used, verify the valve on the discharge side of the meter is closed. Verify the pressure in the mains is normal (i.e., jockey pump pressure) to prevent water hammer.

B. Evaluate the power source. For a diesel motor, ensure the fuel tank is full and the fuel supply valve is open. For an electric driver, verify the electrical supply routing is safeguarded against disruption by fire, collapse, flood, etc.; and that it is tied in before the main facility disconnect.

C. Evaluate the suction supply. If the pump suction is fed from a public supply, the field engineer conducts a hydrant flow test with the pump turned off to verify the supply is sufficient and clear of debris. If the pump suction is fed by a suction tank, ensure it is full and the supply valve is open. If the pump suction is fed by an open body of water, ensure the screens are clear.

D. Start the pump.

E. Verify that the relief valve (if provided) is not flowing water.

F. Partially open one or two hose valves or slightly open the in-line flow meter discharge valve.

G. Check the general operation of the pump and driver. Watch for vibration, leaks (oil or water), unusual noises, and general operation; confirm slight water flow from packing glands. Adjust tightness of the packing glands, if needed.

H. Discharge of water:

1. Where a test valve header is used, regulate the discharge by means of the hose valves and selection of the nozzle tips. The play pipe has a removable 1 1/8-in. (28.6 mm) tip. When the tip is removed, the play pipe has a 1 3/4-in. (44.4 mm) nozzle.

2. When an in-line flow test meter is used, regulate the discharge valve to achieve various flow readings.

3. Test the fire pump over its entire range of flow (0 to 150% of the rated capacity) by controlling the quantity of water discharged. Start at low flow and gradually increase it; starting the pump with hoses open can cause cavitation. Important test points are at churn (no flow), rated capacity and 150% of rated capacity. Take two intermediate points to help develop the performance curve. Thus, a minimum of five (5) test points is required.

Additional flow points (more than 5) can be added at the discretion of those completing the testing to increase the accuracy of the pump curve generated.

Below is one example of a 6-point testing regime:

- Churn (0% rated capacity)
- 50% rated capacity
- 75% rated capacity
- 100% rated capacity
- 125% rated capacity
- 150% rated capacity

I. Record the following data at each test point:

1. Pump rpm

2. Suction pressure

3. Discharge pressure

4. Number and size of hose nozzles, pitot pressure for each nozzle, and total gpm (L/min). For flow meter, record gpm (L/min).

5. Amperes (electric motors)

©2026 Factory Mutual Insurance Company. All rights reserved.

6. Volts (electric motors)

J. Calculation of test results:

1. Rated speed. Confirm pump is operating at rated rpm.

2. Capacity. For hose valve header, using nozzle discharge tables in Hydraulics Tables (P6920), determine the flow in gpm (L/min) for each nozzle at each pitot reading. An example: 16 psi (1.1 bar) pitot pressure with 1 3/4-in. (44.4 mm) nozzle with a coefficient of 0.97 indicates 364 gpm (1378 L/min). Add the flow for each hose line to determine total volume. For a flow meter, the total flow is read directly.

3. Net head. A measure of the actual work done by the pump; essentially the difference between the suction pressure and discharge pressures.

a. For horizontal pumps, net head is the difference between the discharge pressure and the suction pressure.

For vertical pumps, net head is the sum of the discharge pressure and the suction pressure. The suction pressure is calculated by multiplying 0.433 psi/ft (0.098 bar/m) by the height in feet (meters) between the water level and the centerline of the pump discharge.

c. In both cases, if a significant difference exists between the effective point of the suction or discharge gauge and the pump centerline, include this value.

4. Electrical input. Voltage and amperes are read directly from the volt/ammeter. These values are compared to the motor nameplate full-load amperes. The only general calculation is to determine the maximum amperes allowed due to the motor service factor. In the case of 1.15 service factor, the maximum amperes allowed is approximately 1.15 times motor amps, because changes in power factor and efficiency are not considered. If the maximum amps recorded on the test do not exceed this figure, the motor and pump will be judged satisfactory. Measuring voltage and amperes accurately on each phase is most important, since poor power supply with low voltage will cause high ampere readings. This situation can be corrected only by improvement in the power supply; nothing can be done to the motor or the pump.

5. Correction to rated speed. For purposes of plotting, correct the capacity, head and power to the pump rated speed from those values obtained at test speed. The corrections are made as follows:

Capacity: $Q_2 = (N_2/N_1) \times Q_1$

Q_1 = Flow at test speed in gpm (L/min)
Q_2 = Flow at rated speed in gpm (L/min)
N_1 = Test speed in rpm
N_2 = Rated speed in rpm

Head: $P_2 = [N_2/N_1]^{\wedge 2} \times P_1$

P_1 = Pressure at test speed in psi(bar)
P_2 = Pressure at rated speed in psi(bar)

Horsepower: $hp_2 = [N_2/N_1]^{\wedge 2} \times hp_1$

hp_1 = horsepower (kW) at test speed
hp_2 = horsepower (kW) at rated speed

6. The final step in the test calculation is plotting the test points. A net head capacity curve is plotted, and an ampere capacity curve is plotted. A study of these curves will show the performance picture of the pump as it was tested. Compare this curve to the manufacturer’s performance curve of the pump, when available.

K. Throughout the course of testing, start the pump six times manually and six times automatically to verify prompt and smooth start-up at the required pressures or flow.

L. For all electric motors:

1. Allow at least five minutes at full speed after each start-up for motor windings to cool properly.

2. For electric motors greater than 200 hp (150 kW), attempt no more than two starts in 10 to 12 hours; and allow a running interval of at least 15 minutes at full speed.

©2026 Factory Mutual Insurance Company. All rights reserved.

M. Run the pump for at least one hour by discharging at the 150% point to verify smooth operation without coupling failure or overheating.

N. To prevent water hammer at the conclusion of the test, verify pressure in fire service mains is up to normal or up to jockey pump pressure before returning the pump to automatic service. Verify all fire protection equipment is returned to automatic mode and fire protection control valves are fully open. Only the valve to the test header should remain closed.

C.1.2 Testing Variable-Speed Electric Pumps, Variable-Speed Diesel Pumps, and Pressure Limiting Drivers (PLDs)

Conduct flow testing with the variable speed pressure control both enabled and disabled. Take a minimum of five (5) test points with the variable speed pressure control enabled and disabled.

To test the pump performance against the manufacturer's performance curve, test the pump with the pressure-limiting control disabled. To ensure the pressure limiting control is fully functional, test it over the entire range of pump flow.

Ensure the variable speed pressure limit is always above the highest facility pressure demand.

C.1.3 Speed Correction

In field tests, actual speeds of diesel engines will vary from the rated speed. Pumps operated at a constant speed less than rated speed would produce curves parallel to but below the one for rated speed. The nameplate full load speed of an alternating current electric motor operating at rated voltage is accurate enough for test purposes that use of a speed counter is not necessary.

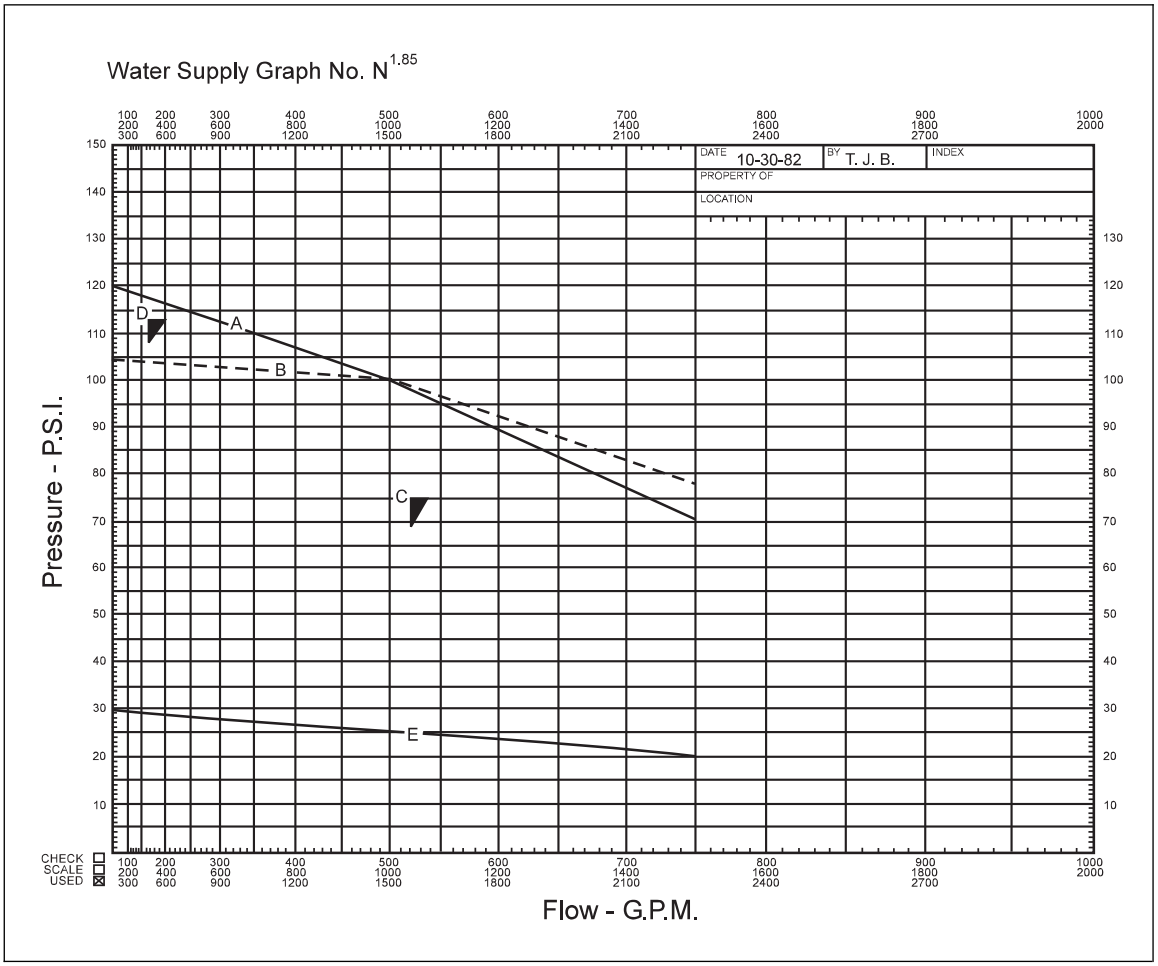

Fig. C.1.3-1. Water supply graph

©2026 Factory Mutual Insurance Company. All rights reserved.

Curve B in Figure C.1.3-1 is one produced by extreme variations from the rated pump speed.

These conditions indicate a problem with the driver and require correction.

If pump speed varies at some points, the flows and pressures may be normalized to what they would have been at rated speed, provided the pump is operated within the design limits of its suction lift. This normalization can be accomplished by use of the following relations:

A. The gpm is proportional to the velocity of the water and, therefore, to the velocity of the impeller (or rpm).

B. Net head is proportional to the square of the velocity of the water and, therefore, to the square of the rpm.

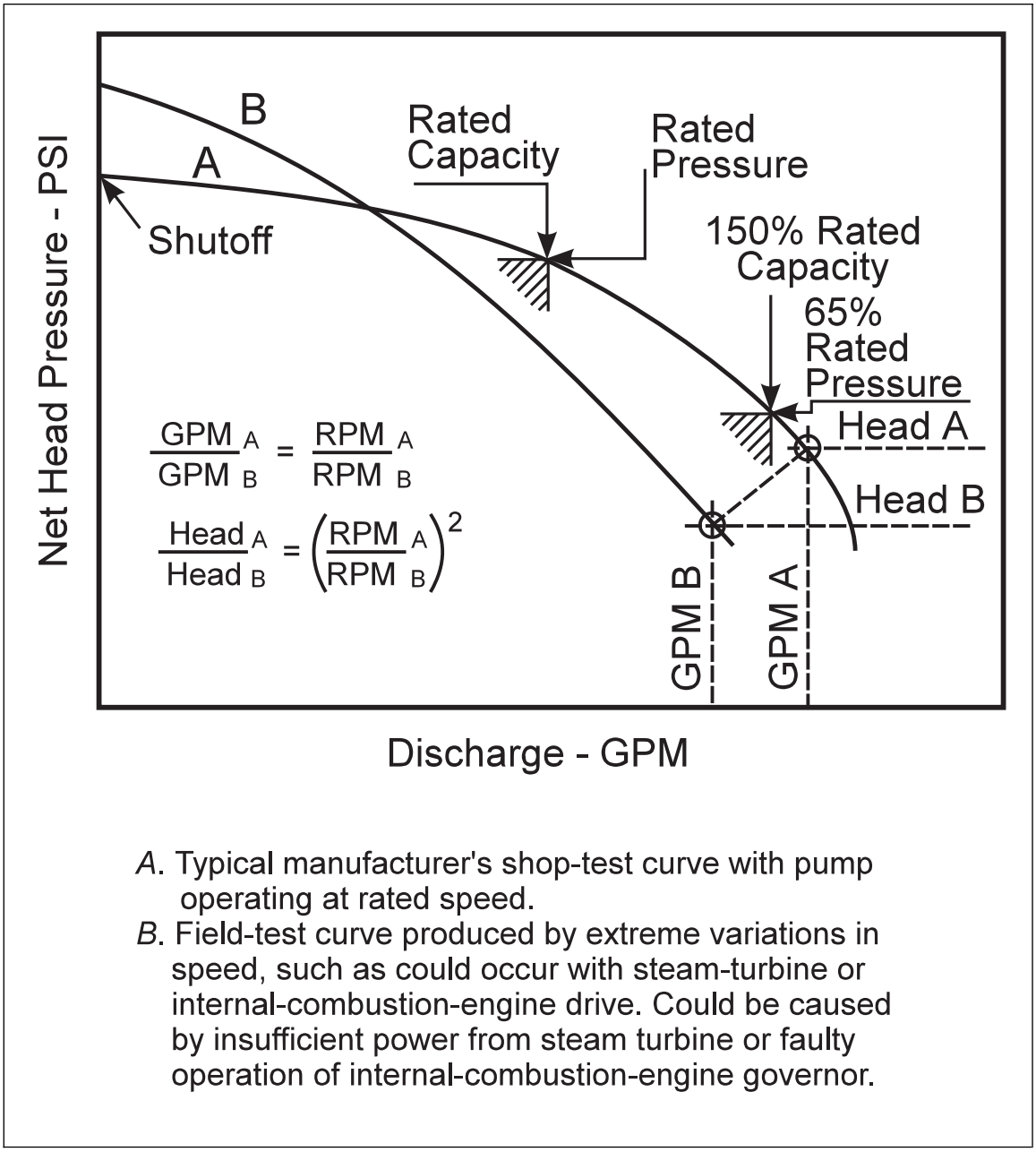

Fig. C.1.3-2. Effect of variations in speed on pump performance curve

©2026 Factory Mutual Insurance Company. All rights reserved.

When testing multiple pumps in series, the entire fire pump system (e.g., all pumps in series, simultaneously) shall be field acceptance tested for proper performance in accordance with the provisions of this data sheet. pressure loss due to elevation reduces the maximum anticipated static pressure in the pipe.

©2026 Factory Mutual Insurance Company. All rights reserved.